

Model Number

NCB20-L2-N0-V1

Features

- **Sensor head bidirectional and rotatable**
- **20 mm flush**
- **Quick mounting bracket**
- **Usable up to SIL 2 acc. to IEC 61508**

Accessories

V1-G-N-2M-PUR
Female cordset, M12, 2-pin, NAMUR, PUR cable

V1-W-N-2M-PUR
Female cordset, M12, 2-pin, NAMUR, PUR cable

MHW 01
Modular mounting bracket

Technical Data

General specifications		
Switching function		Normally closed (NC)
Output type		NAMUR
Rated operating distance	s_n	20 mm
Installation		flush
Assured operating distance	s_a	0 ... 16.2 mm
Actual operating distance	s_r	18 ... 22 mm
Reduction factor r_{Al}		0.33
Reduction factor r_{Cu}		0.31
Reduction factor r_{304}		0.74
Nominal ratings		
Nominal voltage	U_o	8.2 V (R_i approx. 1 kΩ)
Switching frequency	f	0 ... 300 Hz
Hysteresis	H	typ. 5 %
Reverse polarity protection		reverse polarity protected
Short-circuit protection		yes
Current consumption		
Measuring plate not detected		≥ 2.2 mA
Measuring plate detected		≤ 1 mA
Switching state indicator		LED, yellow
Functional safety related parameters		
$MTTF_d$		1660 a
Mission Time (T_M)		20 a
Diagnostic Coverage (DC)		0 %
Ambient conditions		
Ambient temperature		-25 ... 100 °C (-13 ... 212 °F)
Storage temperature		-40 ... 100 °C (-40 ... 212 °F)
Mechanical specifications		
Connection type		Connector plug M12 x 1 , 4-pin
Housing material		PA
Sensing face		PA
Degree of protection		IP66 / IP69K
Mass		130 g
General information		
Use in the hazardous area		see instruction manuals
Category		1G; 2G; 3G; 3D
Compliance with standards and directives		
Standard conformity		
NAMUR		EN 60947-5-6:2000 IEC 60947-5-6:1999
Standards		EN 60947-5-2:2007 EN 60947-5-2/A1:2012 IEC 60947-5-2:2007 IEC 60947-5-2 AMD 1:2012
Approvals and certificates		
EAC conformity		TR CU 012/2011
Protection class		II
Rated insulation voltage	U_i	253 V
Rated impulse withstand voltage	U_{imp}	4000 V
UL approval		cULus Listed, General Purpose
CSA approval		cCSAus Listed, General Purpose
CCC approval		CCC approval / marking not required for products rated ≤36 V

Dimensions

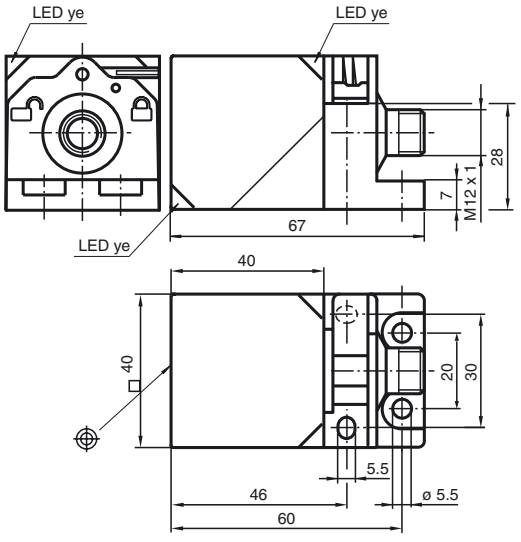

Release date: 2018-04-19 08:12 Date of issue: 2018-04-19 182705_eng.xml

Electrical Connection

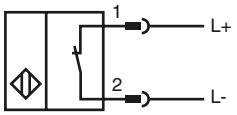

Pinout

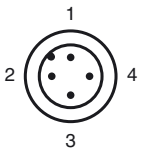

Wire colors in accordance with EN 60947-5-6

1	BN	(brown)
2	BU	(blue)

Equipment protection level Ga		
CE marking		CE 0102
ATEX marking		Ex II 1G Ex ia IIC T6…T1 Ga The Ex-related marking can also be printed on the enclosed label.
Standards		EN 60079-0:2012+A11:2013 EN 60079-11:2012 Ignition protection "Intrinsic safety" Use is restricted to the following stated conditions
Appropriate type		NCB20-L2-N0...
Effective internal inductivity	C_i	≤ 110 nF ; a cable length of 10 m is considered.
Effective internal inductance	L_i	≤ 200 µH ; a cable length of 10 m is considered.
Ambient temperature		Details of the correlation between the type of circuit connected, the maximum permissible ambient temperature, the temperature class, and the effective internal reactance values can be found on the EC-type examination certificate. **Note:** Use the temperature table for category 1 !!! The 20 % reduction in accordance with EN 1127-1 has already been applied to the temperature table for category 1.
Equipment protection level Gb		
CE marking		CE 0102
ATEX marking		Ex II 1G Ex ia IIC T6…T1 Ga The Ex-related marking can also be printed on the enclosed label.
Standards		EN 60079-0:2012+A11:2013, EN 60079-11:2012 Ignition protection "Intrinsic safety" Use is restricted to the following stated conditions
Appropriate type		NCB20-L2-N0...
Effective internal inductivity	C_i	≤ 110 nF ; a cable length of 10 m is considered.
Effective internal inductance	L_i	≤ 200 µH ; a cable length of 10 m is considered.
Maximum permissible ambient temperature	T_{amb}	Details of the correlation between the type of circuit connected, the maximum permissible ambient temperature, the temperature class, and the effective internal reactance values can be found on the EC-type examination certificate.

Release date: 2018-04-19 08:12 Date of issue: 2018-04-19 182705_eng.xml

Equipment protection level Gc (ic)		
Certificate		PF 13 CERT 2895 X
CE marking		CE
ATEX marking		Ex II 3G Ex ic IIC T6…T1 Gc The Ex-related marking can also be printed on the enclosed label.
Standards		EN 60079-0:2012, EN 60079-11:2012 Ignition protection category "ic" Use is restricted to the following stated conditions
Effective internal inductivity	C_i	≤ 110 nF ; a cable length of 10 m is considered.
Effective internal inductance	L_i	≤ 200 µH ; A cable length of 10 m is considered.
Special conditions		
for Pi=34 mW, Ii=25 mA, T6		66 °C (150.8 °F)
for Pi=34 mW, Ii=25 mA, T5		81 °C (177.8 °F)
for Pi=34 mW, Ii=25 mA, T4-T1		100 °C (212 °F)
for Pi=64 mW, Ii=25 mA, T6		66 °C (150.8 °F)
for Pi=64 mW, Ii=25 mA, T5		81 °C (177.8 °F)
for Pi=64 mW, Ii=25 mA, T4-T1		100 °C (212 °F)
for Pi=169 mW, Ii=52 mA, T6		45 °C (113 °F)
for Pi=169 mW, Ii=52 mA, T5		60 °C (140 °F)
for Pi=169 mW, Ii=52 mA, T4-T1		89 °C (192.2 °F)
for Pi=242 mW, Ii=76 mA, T6		30 °C (86 °F)
for Pi=242 mW, Ii=76 mA, T5		45 °C (113 °F)
for Pi=242 mW, Ii=76 mA, T4-T1		74 °C (165.2 °F)
Equipment protection level Gc (nL)		
Standard conformity		EN 60079-15:2005 Ignition protection category "n" Use is restricted to the following stated conditions
Effective internal capacitance C_i		≤ 110 nF ; a cable length of 10 m is considered.
Effective internal inductance L_i		≤ 200 µH ; A cable length of 10 m is considered.
General		The apparatus has to be operated according to the appropriate data in the data sheet and in this instruction manual. The data stated in the data sheet are restricted by this operating instruction! The special conditions must be observed! The ATEX Directive applies only to the use of apparatus under atmospheric conditions. If you use the device outside atmospheric conditions, consider that the permissible safety parameters should be reduced.
Special conditions		
for Pi=34 mW, Ii=25 mA, T6		66 °C (150.8 °F)
for Pi=34 mW, Ii=25 mA, T5		81 °C (177.8 °F)
for Pi=34 mW, Ii=25 mA, T4-T1		100 °C (212 °F)
for Pi=64 mW, Ii=25 mA, T6		66 °C (150.8 °F)
for Pi=64 mW, Ii=25 mA, T5		81 °C (177.8 °F)
for Pi=64 mW, Ii=25 mA, T4-T1		100 °C (212 °F)
for Pi=169 mW, Ii=52 mA, T6		45 °C (113 °F)
for Pi=169 mW, Ii=52 mA, T5		60 °C (140 °F)
for Pi=169 mW, Ii=52 mA, T4-T1		89 °C (192.2 °F)
for Pi=242 mW, Ii=76 mA, T6		30 °C (86 °F)
for Pi=242 mW, Ii=76 mA, T5		45 °C (113 °F)
for Pi=242 mW, Ii=76 mA, T4-T1		74 °C (165.2 °F)
Equipment protection level Da		
ATEX marking		Ex II 1D Ex ia IIIC T135°C Da The Ex-related marking can also be printed on the enclosed label.
Standards		EN 60079-0:2012+A11:2013 EN 60079-11:2012 Ignition protection "Intrinsic safety" Use is restricted to the following stated conditions
Appropriate type		NCB20-L2-N0...
Effective internal inductivity	C_i	≤ 110 nF ; a cable length of 10 m is considered.
Effective internal inductance	L_i	≤ 200 µH ; a cable length of 10 m is considered.
Equipment protection level Dc		
CE marking		CE 0102
ATEX marking		Ex II 3D IP69K T 112 °C (233.6 °F) X
Standards		EN 50281-1-1 Protection via housing Use is restricted to the following stated conditions
Special conditions		
Maximum heating (Temperature rise)		Values can be obtained from the following list, depending on the max. operating voltage Ub max and the minimum series resistance Rv.
at U_{Bmax}=9 V, R_V=562 Ω		12 K
using an amplifier in accordance with EN 60947-5-6		12 K
Equipment protection level Dc (tc)		
CE marking		CE
ATEX marking		Ex II 3D Ex tc IIIC T80°C Dc The Ex-related marking can also be printed on the enclosed label.

Release date: 2018-04-19 08:12 Date of issue: 2018-04-19 182705_eng.xml

Standards	EN 60079-0:2012+A11:2013, EN 60079-31:2014 Protection by enclosure "tc" Some of the information in this instruction manual is more specific than the information provided in the datasheet.
General	The corresponding datasheets, declarations of conformity, EC-type examination certificates, certifications, and control draw see datasheets), form an integral part of this document. These documents can be found at The maximum surface temperature of the device was determined without a layer of dus of the information in this instruction manual is more specific than the information provided in the datasheet.
Special conditions	
Maximum permissible ambient temperature T_{Umax}	Values can be obtained from the following list, depending on the max. operating voltage Ub max and the minimum series resistance Rv.
at U_{Bmax}=9 V, R_V=562 Ω	57 °C (134.6 °F)
using an amplifier in accordance with EN 60947-5-6	57 °C (134.6 °F)

Equipment protection level Dc (tD)	
General	The apparatus has to be operated according to the appropriate data in the data sheet and in this instruction manual. The maximum surface temperature has been determined in accordance with method A without a dust layer on the equipment. The data stated in the data sheet are restricted by this operating instruction! The special conditions must be adhered to!
Special conditions	
Minimum series resistance R_V	A minimum series resistance RV is to be provided between the power supply voltage and the proximity switch in accordance with the following list. This can also be assured by using a switch amplifier.
Maximum permissible ambient temperature T_{Umax}	Values can be obtained from the following list, depending on the max. operating voltage Ub max and the minimum series resistance Rv.
at U_{Bmax}=9 V, R_V=562 Ω	57 °C (134.6 °F)
using an amplifier in accordance with EN 60947-5-6	57 °C (134.6 °F)

Release date: 2018-04-19 08:12 Date of issue: 2018-04-19 182705_eng.xml