

Model Number

NJ40+U1+N

Features

- **40 mm non-flush**

Accessories

MHW 01
Modular mounting bracket

MH 04-2681F
Mounting aid for VariKont, +U1+ and +U9*

MH 04-2057B
Mounting aid for VariKont and +U1+

Technical Data

General specifications		
Switching function		Normally closed (NC)
Output type		NAMUR
Rated operating distance	s_n	40 mm
Installation		non-flush
Assured operating distance	s_a	0 ... 32.4 mm
Reduction factor r_{Al}		0.4
Reduction factor r_{Cu}		0.3
Reduction factor r_{304}		0.85
Output type		2-wire
Nominal ratings		
Nominal voltage	U_o	8.2 V (R_i approx. 1 kΩ)
Switching frequency	f	0 ... 80 Hz
Current consumption		
Measuring plate not detected		≥ 3 mA
Measuring plate detected		≤ 1 mA
Functional safety related parameters		
$MTTF_d$		2588 a
Mission Time (T_M)		20 a
Diagnostic Coverage (DC)		0 %
Ambient conditions		
Ambient temperature		-25 ... 100 °C (-13 ... 212 °F)
Mechanical specifications		
Connection type		screw terminals
Information for connection		A maximum of two conductors with the same core cross section may be mounted on one terminal connection! tightening torque 1.2 Nm + 10 %
Core cross-section		up to 2.5 mm²
Minimum core cross-section		without wire end ferrule 0.5 mm² , with connector sleeves 0.34 mm²
Maximum core cross-section		without wire end ferrule 2.5 mm² , with connector sleeves 1.5 mm²
Housing material		PBT
Sensing face		PBT
Degree of protection		IP68
Note		Tightening torque: 1.8 Nm (housing)
General information		
Use in the hazardous area		see instruction manuals
Category		1G; 2G; 1D
Compliance with standards and directives		
Standard conformity		
NAMUR		EN 60947-5-6:2000 IEC 60947-5-6:1999
Standards		EN 60947-5-2:2007 EN 60947-5-2/A1:2012 IEC 60947-5-2:2007 IEC 60947-5-2 AMD 1:2012
Approvals and certificates		
EAC conformity		TR CU 012/2011
FM approval		
Control drawing		116-0165
UL approval		cULus Listed, General Purpose
CSA approval		cCSAus Listed, General Purpose
CCC approval		CCC approval / marking not required for products rated ≤36 V

Dimensions

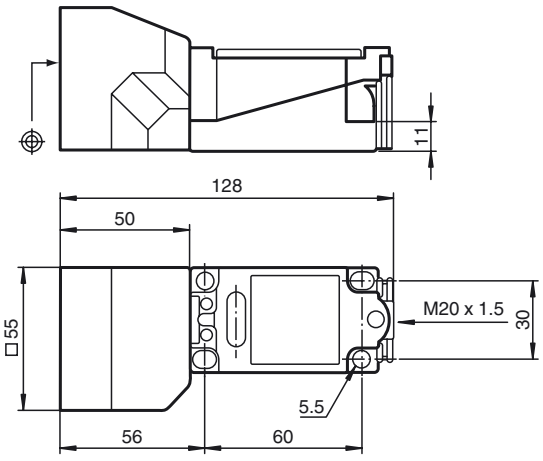

Release date: 2018-04-19 08:20 Date of issue: 2018-04-19 106690_eng.xml

Electrical Connection

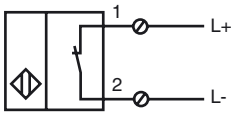

Equipment protection level Ga		
CE marking		CE 0102
ATEX marking		Ex II 1G Ex ia IIC T6…T1 Ga The Ex-related marking can also be printed on the enclosed label.
Standards		EN 60079-0:2012+A11:2013 EN 60079-11:2012 Ignition protection "Intrinsic safety" Use is restricted to the following stated conditions
Appropriate type		NJ 40+...+N...
Effective internal inductivity	C_i	≤ 180 nF ; a cable length of 10 m is considered.
Effective internal inductance	L_i	≤ 130 µH ; a cable length of 10 m is considered.
Ambient temperature		Details of the correlation between the type of circuit connected, the maximum permissible ambient temperature, the temperature class, and the effective internal reactance values can be found on the EC-type examination certificate. **Note:** Use the temperature table for category 1 !!! The 20 % reduction in accordance with EN 1127-1 has already been applied to the temperature table for category 1.
Equipment protection level Gb		
CE marking		CE 0102
ATEX marking		Ex II 1G Ex ia IIC T6…T1 Ga The Ex-related marking can also be printed on the enclosed label.
Standards		EN 60079-0:2012+A11:2013, EN 60079-11:2012 Ignition protection "Intrinsic safety" Use is restricted to the following stated conditions
Appropriate type		NJ 40+...+N...
Effective internal inductivity	C_i	≤ 180 nF ; a cable length of 10 m is considered.
Effective internal inductance	L_i	≤ 130 µH ; a cable length of 10 m is considered.
Maximum permissible ambient temperature	T_{amb}	Details of the correlation between the type of circuit connected, the maximum permissible ambient temperature, the temperature class, and the effective internal reactance values can be found on the EC-type examination certificate.
Equipment protection level Da		
CE marking		CE 0102
ATEX marking		Ex II 1D Ex ia IIIC T135°C Da The Ex-related marking can also be printed on the enclosed label.
Standards		EN 60079-0:2012+A11:2013 EN 60079-11:2012 Ignition protection "Intrinsic safety" Use is restricted to the following stated conditions
Appropriate type		NJ 40+...+N...
Effective internal inductivity	C_i	≤ 180 nF ; a cable length of 10 m is considered.
Effective internal inductance	L_i	≤ 130 µH ; a cable length of 10 m is considered.

Release date: 2018-04-19 08:20 Date of issue: 2018-04-19 106690_eng.xml