

Model Number

NRN75-FP-E2-C-P3-V1

Features

- **75 mm non-flush**
- **Reduction factor = 1**
- **Weld Immune**

Accessories

V1-G
Female connector, M12, 4-pin, field attachable
V1-W
Female connector, M12, 4-pin, field attachable
V1-G-2M-PUR
Female cordset, M12, 4-pin, PUR cable
V1-W-2M-PUR
Female cordset, M12, 4-pin, PUR cable

Technical Data

General specifications		
Switching element function		PNP NO
Rated operating distance	s_n	75 mm
Installation		non-flush
Output polarity		DC
Assured operating distance	s_a	0 ... 55 mm
Reduction factor r_{Al}		1
Reduction factor r_{Cu}		1
Reduction factor r_{304}		1
Reduction factor r_{St37}		1
Nominal ratings		
Operating voltage	U_B	10 ... 30 V DC
Switching frequency	f	0 ... 1 Hz
Hysteresis	H	typ. 3 %
Reverse polarity protection		reverse polarity protected
Short-circuit protection		pulsing
Voltage drop	U_d	≤ 3 V
Rated insulation voltage	U_{BIS}	50 V
Operating current	I_L	0 ... 200 mA
Off-state current	I_r	0 ... 0.5 mA
No-load supply current	I_0	≤ 20 mA
Time delay before availability	t_v	≤ 300 ms
Operating voltage indicator		LED, green
Switching state indicator		LED, yellow
Functional safety related parameters		
$MTTF_d$		944 a
Mission Time (T_M)		20 a
Diagnostic Coverage (DC)		0 %
Ambient conditions		
Ambient temperature		0 ... 50 °C (32 ... 122 °F) (± 10 % changing operating distance) -25 ... 70 °C (-13 ... 158 °F) (± 20 % changing operating distance)
Mechanical specifications		
Connection type		Connector M12 x 1 , 4-pin
Housing material		PBT/metal
Sensing face		PBT, PTFE coated
Housing base		PBT
Degree of protection		IP68
Compliance with standards and directives		
Standard conformity		
Standards		EN 60947-5-2:2007 IEC 60947-5-2:2007
Approvals and certificates		
UL approval		cULus Listed, General Purpose
CSA approval		cCSAus Listed, General Purpose
CCC approval		CCC approval / marking not required for products rated ≤36 V

Dimensions

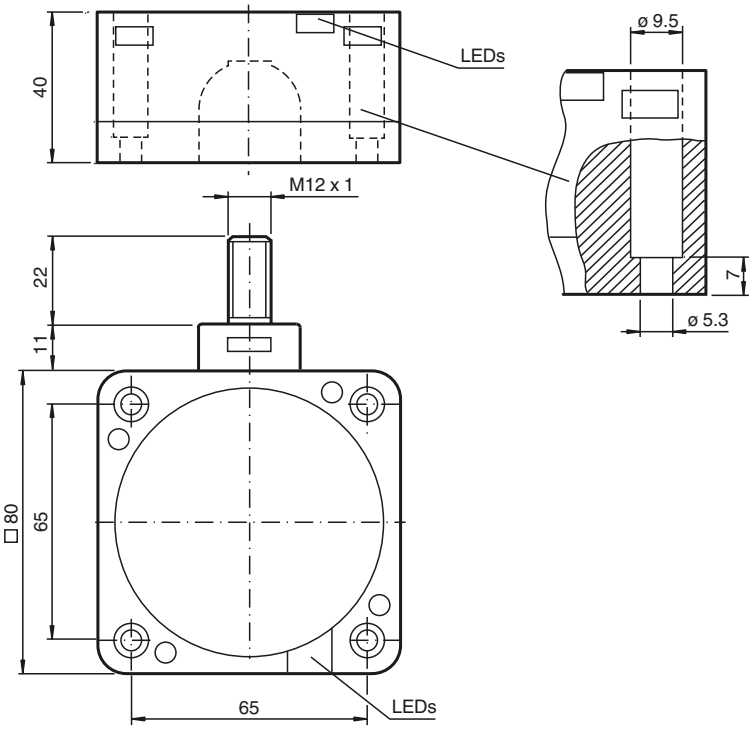

Release date: 2015-07-28 09:35 Date of issue: 2015-07-28 183429_eng.xml

Electrical Connection

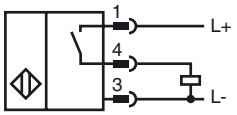

Pinout

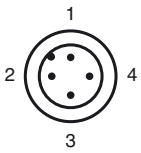

Wire colors in accordance with EN 60947-5-2

1	BN	(brown)
2	WH	(white)
3	BU	(blue)
4	BK	(black)

Release date: 2015-07-28 09:35 Date of issue: 2015-07-28 183429_eng.xml

Refer to “General Notes Relating to Pepperl+Fuchs Product Information”.

PEPPERL+FUCHS
SENSING YOUR NEEDS

Installation Hint

These sensors are also suitable for mounting on metal. The stated switching distance ia achieved with a metal base plate, min. dimensions 225 mm x 225 mm.
When mounted on a non-metallic base plate the switching distance is reduced by approx. 10 %.

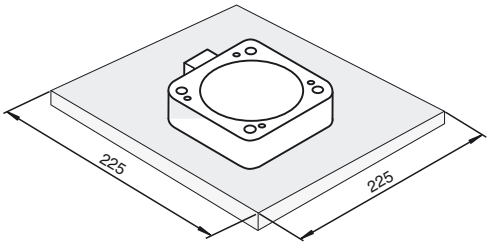

Release date: 2015-07-28 09:35 Date of issue: 2015-07-28 183429_eng.xml