

Model Number

RL28-55/47/82b/105/106

Retroreflective sensor
with 5-pin, M12 x 1 plastic connector

Features

- Universal series with highly versatile fields of use
- Resistant against noise: reliable operation under all conditions
- Version with red light
- Version with heated front panel

Product information

The series 28 family of sensors can be universally used. It has a large range of models that allows it to be integrated into any automation environment. The sensors are contained in sturdy water resistant plastic housings with multiple fastening options and scratch resistant optical cover. Features such as a timer function, and functions including a light/dark switch, sensitivity adjuster and highly visible status LEDs make for less effort on the part of the user and streamline installation, setup and operation. Just about any task associated with positioning, moving, conveying and monitoring can be accomplished with these sensors.

Dimensions

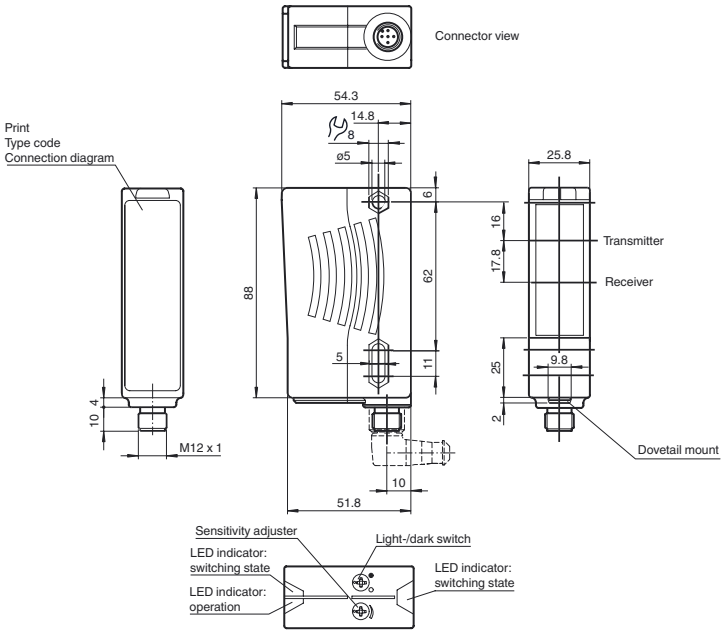

Electrical connection

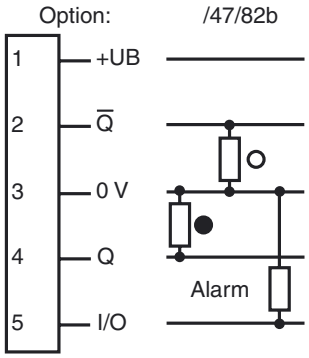

○ = Light on
● = Dark on

Pinout

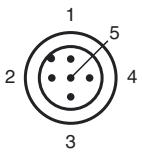

Release date: 2012-06-01 11:37 Date of issue: 2012-06-21 132450_eng.xml

Technical data

General specifications		
Effective detection range		0 ... 17 m
Reflector distance		0.05 ... 17 m
Threshold detection range		21 m
Reference target		H85-2 reflector
Light source		LED
Light type		modulated visible red light
Diameter of the light spot		approx. 290 mm at a distance of 17 m
Angle of divergence		emitter 1.2° receiver 2°
Ambient light limit		80000 Lux
Functional safety related parameters		
$MTTF_d$		1190 a
Mission Time (T_M)		20 a
Diagnostic Coverage (DC)		0 %
Indicators/operating means		
Operating display		LED green
Function display		2 LEDs yellow, light up when light beam is free, flash when falling short of the stability control, off when light beam is interrupted
Controls		sensitivity adjustment (Adjustment to < 25% of the effective operating range) , Light/Dark switch
Electrical specifications		
Operating voltage	U_B	24 V DC ± 20 %
Ripple		10 %
No-load supply current	I_0	≤ 70 mA
Output		
Pre-fault indication output		1 PNP, inactive when falling short of the stability control for 10;s immediately inactive if 4 light beam interruptions take place
Switching type		light/dark on switchable
Signal output		2 PNP, complementary, short-circuit protected, reverse polarity protected , open collectors
Switching voltage		max. 30 V DC
Switching current		max. 2 A
Switching frequency	f	1000 Hz
Response time		0.5 ms
Ambient conditions		
Ambient temperature		-40 ... 60 °C (-40 ... 140 °F)
Storage temperature		-40 ... 75 °C (-40 ... 167 °F)
Mechanical specifications		
Protection degree		IP67
Connection		M12 x 1 connector, 5-pin
Material		
Housing		Plastic ABS
Optical face		Plastic pane
Mass		70 g
Note		Heated lens
Compliance with standards and directives		
Directive conformity		Low Voltage Directive 2006/95/EC EMC Directive 2004/108/EC
Standard conformity		
Product standard		EN 60947-5-2:2007 IEC 60947-5-2:2007
Approvals and certificates		
Protection class		II, rated voltage ≤ 250 V AC with pollution degree 1-2 according to IEC 60664-1 Output circuit basis insulation of input circuit according to EN 50178, rated insulation voltage 230 V AC Caution! The protection class 2 is only valid when the terminal compartment is closed.
UL approval		cULus Listed , Class 2 power source
CCC approval		Products with a maximum operating voltage of ≤36 V do not bear a CCC marking because they do not require approval.

Accessories

OMH-05
Mounting aid for round steel ø 12 mm or sheet 1.5 mm ... 3 mm

OMH-07
Mounting aid for round steel ø 12 mm or sheet 1.5 mm ... 3 mm

OMH-21
Mounting bracket

OMH-22
Mounting bracket

OMH-MLV11-K
dove tail mounting clamp

OMH-RLK29
Mounting bracket

OMH-RLK29-HW
Mounting bracket for rear wall mounting

OMH-RL28-C
Weld slag cover model

Other suitable accessories can be found at www.pepperl-fuchs.com

Release date: 2012-06-01 11:37 Date of issue: 2012-06-21 132450_eng.xml

Subject to modifications without notice
Copyright Pepperl+Fuchs
Pepperl+Fuchs Group www.pepperl-fuchs.com
USA: +1 330 486 0001 fa-info@us.pepperl-fuchs.com
Germany: +49 621 776-4411 fa-info@pepperl-fuchs.com
Singapore: +65 6779 9091 fa-info@sg.pepperl-fuchs.com
PEPPERL+FUCHS SENSING YOUR NEEDS

Curves/Diagrams

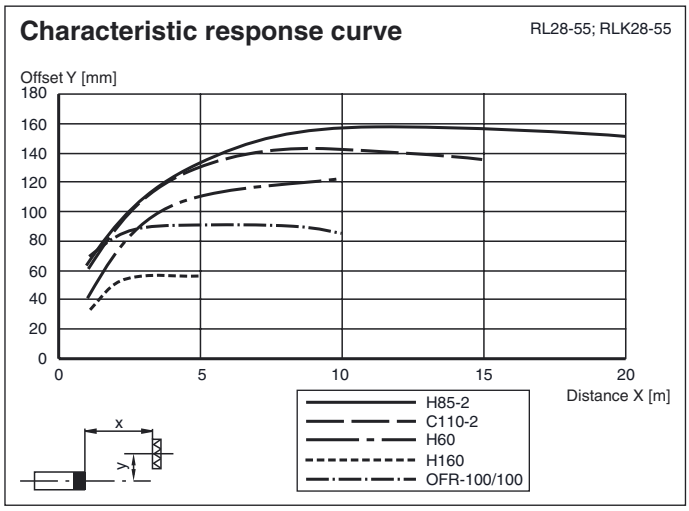

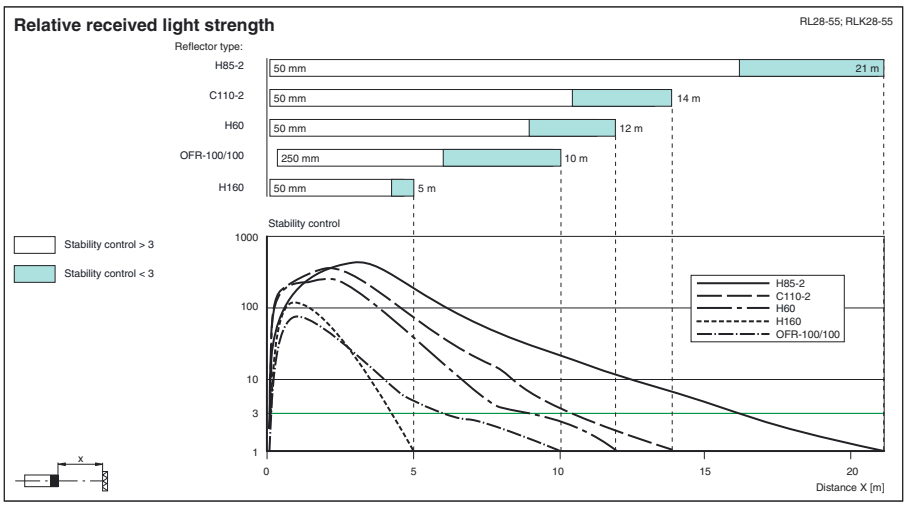

Release date: 2012-06-01 11:37 Date of issue: 2012-06-21 132450_eng.xml