

Model Number

RLG28-55-4921/40a/73c/136

Retroreflective area sensor
with 4-pin, M12 x 1 connector

Features

- Retro-reflective area sensor with 6 light beams in standard photoelectric-sensor enclosure
- Connection compatibly replaces single beam photoelectric sensor
- Reliable detection of the front edge of the object irrespective of its shape and position
- Constant object detection from 12 mm within the entire detection area
- Reliable detection of all surfaces irrespective of the object texture
- Switches when contrast difference 10%
- Bright, highly visible transmitter beams, guarantee convenient alignment of the sensor

Product information

The RLG28 retro-reflective area sensor contains several transmitters and receivers in one housing and with a reflector positioned opposite forms a 60 mm detection area over a sensing range of 4 m.
When the light beams are interrupted by an object, the switching function is triggered. The smallest detectable object size is 12 mm. The RLG28 switches at a 10% contrast difference with a response time of 1 ms.

Dimensions

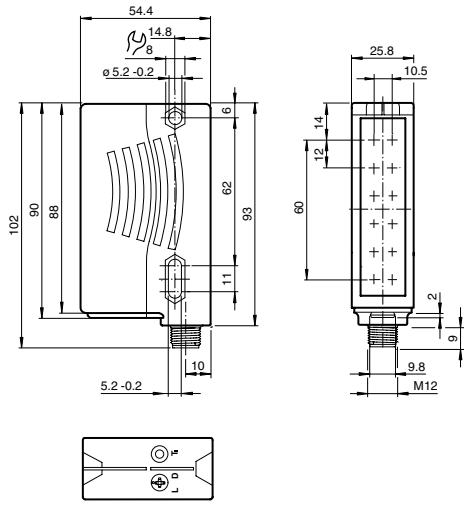

Electrical connection

Option:

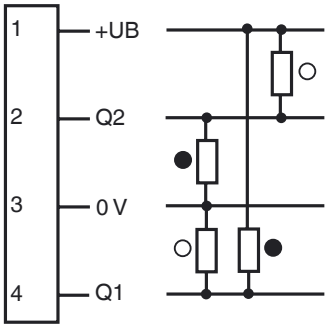

○ = Light on
● = Dark on

Pinout

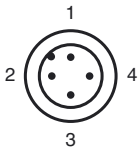

Indicators/operating means

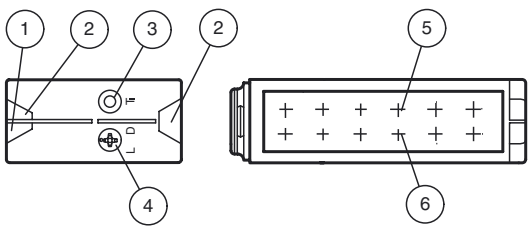

1	Operating display	green
2	Signal display	yellow
3	TEACH-IN button	
4	Light/dark switch	
5	Emitter	
6	Receiver	

Release date: 2015-02-18 11:24 Date of issue: 2015-02-18 227596_eng.xml

Technical data

General specifications		
Effective detection range		0 ... 4 m
Reflector distance		H60 reflector: 0.4 ... 4 m , H85-2 reflector: 0.2 ... 4 m , Foil reflector OFR-100/100: 0.4 ... 3 m
Threshold detection range		5.6 m
Sensing range		typical 60 mm , Object has to cover the refelector completely in one dimension
Reference target		H60 reflector , H85-2 reflector , Foil reflector OFR-100/100
Light source		LED
Light type		modulated visible red light , 625 nm
Polarization filter		yes
Diameter of the light spot		approx. 220 mm at detection range 4 m
Angle of divergence		+/- 2.5 °
Ambient light limit		5000 Lux
Resolution		12 mm to 4 m Detection/capture range: 60 mm (no foreground suppression) 5 mm to 1 m Detection/capture range: 55 mm (foreground suppression: 150 mm in front of the sensor; 50 mm in front of the reflector) 5 mm to 1.5 m Detection/capture range: 40 mm (foreground suppression: 150 mm in front of the sensor; 50 mm in front of the reflector)
Functional safety related parameters		
$MTTF_d$		310 a
Mission Time (T_M)		20 a
Diagnostic Coverage (DC)		0 %
Indicators/operating means		
Operation indicator		LED green, statically lit Power on Undervoltage indicator: Green LED, pulsing (approx. 0.8 Hz) short-circuit : LED green flashing (approx. 4 Hz)
Function indicator		2 LEDs yellow, light up when light beam is free, flash when falling short of the stability control, off when light beam is interrupted Teach-In : LED yellow/green; equiphase flashing; 2,5 Hz Changeover signal tracking: LED yellow, 1 Hz flashing / 2x flashing
Control elements		rotary switch for light/dark , Teach-In key
Electrical specifications		
Operating voltage	U_B	12 ... 30 V DC Power from Class 2 Power Source
Ripple		max. 10 %
No-load supply current	I_0	max. 50 mA
Output		
Switching type		light/dark on, switchable
Signal output		2 push-pull (4 in 1) outputs, complementary, short-circuit proof, reverse polarity protected
Switching voltage		max. 30 V DC
Switching current		max. 100 mA
Voltage drop	U_d	≤ 2.5 V DC
Switching frequency	f	230 Hz
Response time		1 ms
Ambient conditions		
Ambient temperature		-10 ... 40 °C (14 ... 104 °F) -30 ... 60 °C (-22 ... 140 °F) at active signal tracking
Storage temperature		-40 ... 70 °C (-40 ... 158 °F)
Mechanical specifications		
Degree of protection		IP67
Connection		4-pin, M12 x 1 connector
Material		
Housing		Plastic ABS
Optical face		Plastic pane
Mass		100 g
Compliance with standards and directives		
Directive conformity		
EMC Directive 2004/108/EC		EN 60947-5-2:2007
Approvals and certificates		
Protection class		II, rated voltage ≤ 250 V AC with pollution degree 1-2 according to IEC 60664-1 , functional insulation acc. to DIN EN 50178
UL approval		cULus Listed, Class 2 Power Source
CCC approval		CCC approval / marking not required for products rated ≤36 V

Accessories

OMH-05
Mounting aid for round steel ø 12 mm or sheet 1.5 mm ... 3 mm

OMH-07
Mounting aid for round steel ø 12 mm or sheet 1.5 mm ... 3 mm

OMH-21
Mounting bracket

OMH-RLK29-HW
Mounting bracket for rear wall mounting

OMH-K01
dove tail mounting clamp

REF-H60
Reflector, rectangular 40.5 mm x 60 mm, mounting holes

REF-H85-2
Reflector, rectangular 84.5 mm x 84.5 mm, mounting holes

V1-G-2M-PVC
Female cordset, M12, 4-pin, PVC cable

V1-G-2M-PUR
Female cordset, M12, 4-pin, PUR cable

V1-W-2M-PUR
Female cordset, M12, 4-pin, PUR cable

Additional accessories can be found in the Internet.

Release date: 2015-02-18 11:24 Date of issue: 2015-02-18 227596_eng.xml

Notes

Mounting:

Ensure that the red light transmitted by the sensor fully illuminates the reflector.
To ensure optimal detection, the entire 60 mm detection field must appear on the reflector.
To check this illumination, look at the reflector from over the top of the sensor housing.

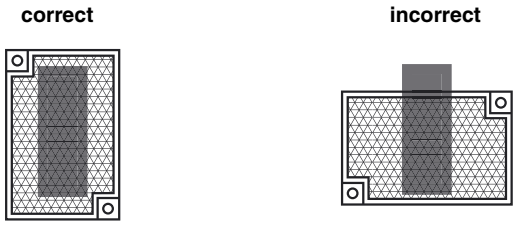

Teach-in:

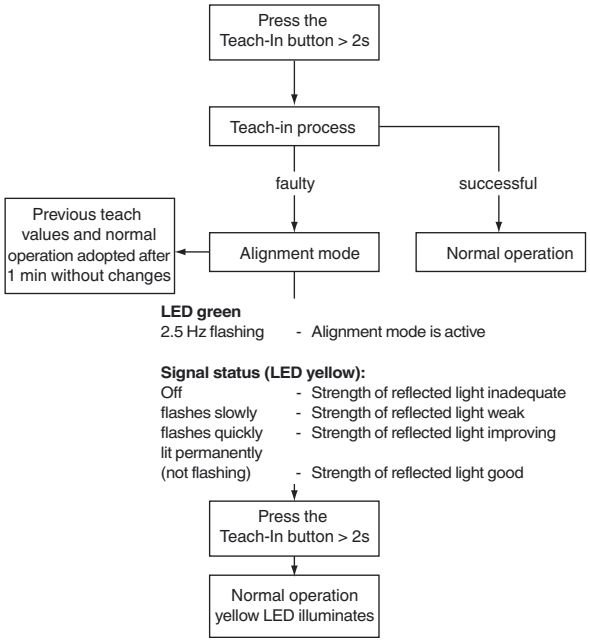

More stringent adjustment requirements: Ensure that the device is correctly aligned in the near range of 0.2 m ... 0.6 m.

Object detection after successful Teach-in

The target should be large enough so that the reflector is always completely covered in one dimension!

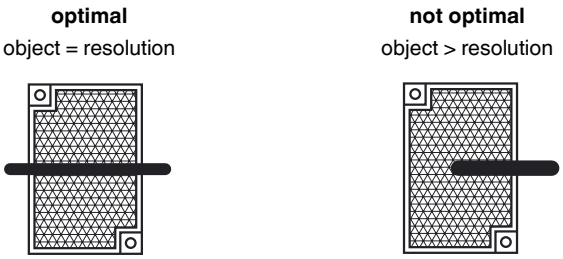

Signal tracking:

Active:

- At variable temperature
- Objects located in the light path that lie below the switching point. These objects result in a readjustment of the emitter. This allows these objects to be taught in or taught out.

Inactive:

- Function not available

To alter the signal tracking, press the Teach-in button for >10 seconds. The current status is displayed. Briefly pressing the Teach-in button chan-

Release date: 2015-02-18 11:24 Date of issue: 2015-02-18 227596_eng.xml

ges the mode.

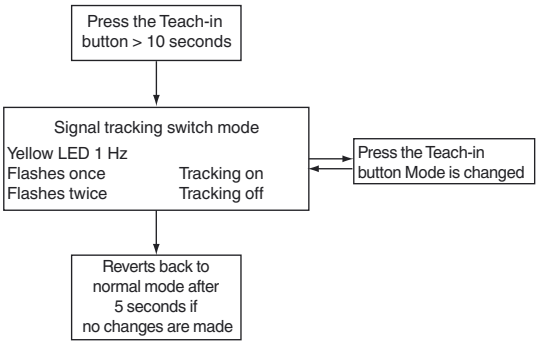

Release date: 2015-02-18 11:24 Date of issue: 2015-02-18 227596_eng.xml

Refer to “General Notes Relating to Pepperl+Fuchs Product Information”.
Pepperl+Fuchs Group www.pepperl-fuchs.com
USA: +1 330 486 0001 fa-info@us.pepperl-fuchs.com
Germany: +49 621 776 4411 fa-info@de.pepperl-fuchs.com
Singapore: +65 6779 9091 fa-info@sg.pepperl-fuchs.com
PEPPERL+FUCHS SENSING YOUR NEEDS