

Model Number

UB800-18GM40-I-V1

Single head system

Features

- **Short design, 40 mm**
- **Function indicators visible from all directions**
- **Analog output 4 mA ... 20 mA**
- **Measuring window adjustable**
- **Program input**
- **Temperature compensation**

Diagrams

Characteristic response curve

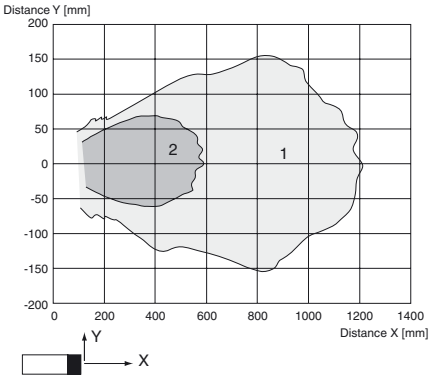

Curve 1: flat surface 100 mm x 100 mm
Curve 2: round bar, Ø 25 mm

Technical data

General specifications	
Sensing range	50 ... 800 mm
Adjustment range	70 ... 800 mm
Unusable area	0 ... 50 mm
Standard target plate	100 mm x 100 mm
Transducer frequency	approx. 205 kHz
Response delay	approx. 100 ms
Indicators/operating means	
LED yellow	solid yellow: object in the evaluation range yellow, flashing: program function, object detected
LED red	solid red: Error red, flashing: program function, object not detected
Electrical specifications	
Operating voltage U_B	10 ... 30 V DC , ripple 10 $\%_{SS}$
No-load supply current I_0	≤ 20 mA
Input	
Input type	1 program input lower evaluation limit A1: -U_B ... +1 V, upper evaluation limit A2: +4 V ... +U_B input impedance: > 4.7 kΩ, pulse duration: ≥ 1 s
Output	
Output type	1 analog output 4 ... 20 mA, short-circuit/overload protected
Default setting	evaluation limit A1: 70 mm evaluation limit A2: 800 mm
Resolution	0.4 mm at max. sensing range
Deviation of the characteristic curve	± 1 % of full-scale value
Repeat accuracy	± 0.5 % of full-scale value
Load impedance	0 ... 300 Ohm
Temperature influence	± 1.5 % of full-scale value
Ambient conditions	
Ambient temperature	-25 ... 70 °C (-13 ... 158 °F)
Storage temperature	-40 ... 85 °C (-40 ... 185 °F)
Mechanical specifications	
Connection type	Connector M12 x 1 , 4-pin
Protection degree	IP67
Material	
Housing	brass, nickel-plated
Transducer	epoxy resin/hollow glass sphere mixture; foam polyurethane, cover PBT
Mass	25 g
Compliance with standards and directives	
Standard conformity	
Standards	EN 60947-5-2:2007 IEC 60947-5-2:2007
Approvals and certificates	
UL approval	cULus Listed, General Purpose
CSA approval	cCSAus Listed, General Purpose

Release date: 2013-02-26 15:28 Date of issue: 2013-02-26 131764_eng.xml

Subject to reasonable modifications due to technical advances. Copyright Pepperl+Fuchs, Printed in Germany

Dimensions

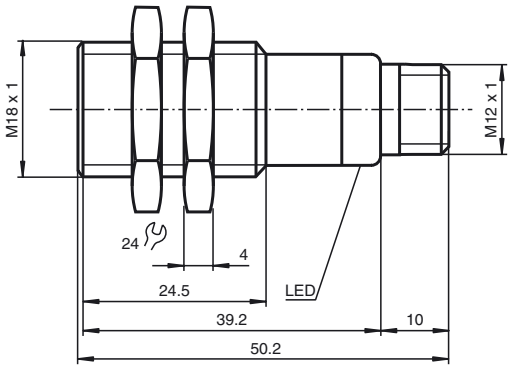

Electrical Connection

Standard symbol/Connections:
(version I)

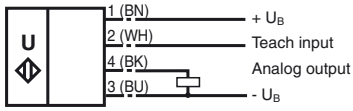

Core colors in accordance with EN 60947-5-2.

Pinout

Connector V1



Accessories

UB-PROG2
Programming unit

OMH-04
Mounting aid for round steel ø 12 mm or sheet 1.5 mm ... 3 mm

BF 18
Mounting flange, 18 mm

BF 18-F
Mounting flange with dead stop, 18 mm

BF 5-30
Universal mounting bracket for cylindrical sensors with a diameter of 5 ... 30 mm

V1-G-2M-PVC
Cable socket, M12, 4-pin, PVC cable

V1-W-2M-PUR
Cable socket, M12, 4-pin, PUR cable

Adjusting the evaluation limits

Additional Information

Programmed analogue output function

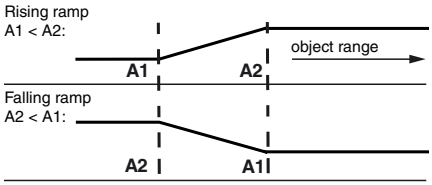

Release date: 2013-02-26 15:28 Date of issue: 2013-02-26 131764_eng.xml

Subject to reasonable modifications due to technical advances. Copyright Pepperl+Fuchs, Printed in Germany
Pepperl+Fuchs Group • Tel.: Germany +49 621 776-0 • USA +1 330 4253555 • Singapore +65 67799091 • Internet http://www.pepperl-fuchs.com

The ultrasonic sensor features an analogue output with two teachable evaluation limits. These are set by applying the supply voltage $-U_B$ or $+U_B$ to the TEACH-IN input. The supply voltage must be applied to the TEACH-IN input for at least 1 s. LEDs indicate whether the sensor has recognised the target during the TEACH-IN procedure. The lower evaluation limit A1 is taught with $-U_B$, A2 with $+U_B$.

Two different output functions can be set:

1. Analogue value increases with rising distance to object (rising ramp)
2. Analogue value falls with rising distance to object (falling ramp)

TEACH-IN rising ramp (A2 > A1)

- Position object at lower evaluation limit
- TEACH-IN lower limit A1 with - U_B
- Position object at upper evaluation limit
- TEACH-IN upper limit A2 with + U_B

TEACH-IN falling ramp (A1 > A2):

- Position object at lower evaluation limit
- TEACH-IN lower limit A2 with + U_B
- Position object at upper evaluation limit
- TEACH-IN upper limit A1 with - U_B

Default setting

A1:	unusable area
A2:	nominal sensing range
Mode of operation:	rising ramp

LED Displays

Displays in dependence on operating mode	Red LED	Yellow LED
TEACH-IN evaluation limit		
Object detected	off	flashes
No object detected	flashes	off
Object uncertain (TEACH-IN invalid)	on	off
Normal mode (evaluation range)	off	on
Fault	on	previous state

Installation conditions

If the sensor is installed at places, where the environment temperature can fall below 0 °C, for the sensors fixation, one of the mounting flanges BF18, BF18-F or BF 5-30 must be used.

In case of direct mounting of the sensor in a through hole using the steel nuts, it has to be fixed at the middle of the housing thread. If a fixation at the front end of the threaded housing is required, plastic nuts with centering ring (accessories) must be used.

Release date: 2013-02-26 15:28 Date of issue: 2013-02-26 131764_eng.xml

Subject to reasonable modifications due to technical advances. Copyright Pepperl+Fuchs, Printed in Germany