

## Model Number

**UBE1000-18GM40-SE2-V1**

Single head system

## Features

- **Short design, 40 mm**
- **Function indicators visible from all directions**
- **Switch output**
- **Program input**
- **Integrated alignment aid**

## Diagrams

### Characteristic response curve

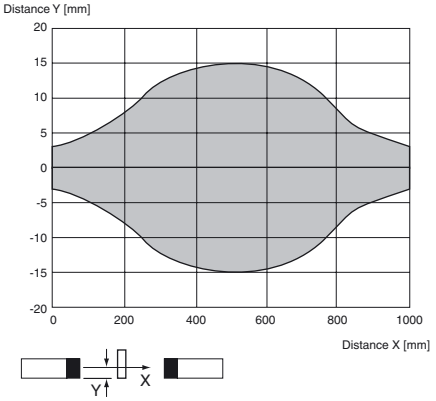


Obstacle: flat plate 100 mm x 100 mm

## Technical data

| | |
|---|---|
| **General specifications** | |
| Sensing range | 50 ... 1000 mm |
| Standard target plate | 100 mm x 100 mm |
| Transducer frequency | approx. 205 kHz |
| **Indicators/operating means** | |
| LED green | Power on |
| LED yellow | switching state |
| LED red | error, object uncertain |
| **Electrical specifications** | |
| Operating voltage $U_B$ | 10 ... 30 V DC , ripple 10 %$_{SS}$ |
| No-load supply current $I_0$ | ≤ 20 mA |
| **Input** | |
| Input type | 1 program input<br>free air path: -$U_B$ ... +1 V, object: +6 V ... +$U_B$<br>input impedance: > 4,7 kΩ program pulse: ≥ 1 s |
| **Output** | |
| Output type | PNP, NO |
| Rated operating current $I_e$ | 200 mA , short-circuit/overload protected |
| Voltage drop $U_d$ | ≤ 3 V |
| Switch-on delay $t_{on}$ | < 5 ms |
| Switching frequency f | ≤ 100 Hz |
| **Ambient conditions** | |
| Ambient temperature | -25 ... 70 °C (-13 ... 158 °F) |
| Storage temperature | -40 ... 85 °C (-40 ... 185 °F) |
| **Mechanical specifications** | |
| Connection type | Device connector M12 x 1 , 4-pin |
| Protection degree | IP67 |
| Material | |
| Housing | brass, nickel-plated |
| Transducer | epoxy resin/hollow glass sphere mixture; foam polyurethane, cover PBT |
| Mass | 25 g |
| **Compliance with standards and directives** | |
| Standard conformity | |
| Standards | EN 60947-5-2:2007<br>IEC 60947-5-2:2007 |
| **Approvals and certificates** | |
| UL approval | cULus Listed, General Purpose |
| CSA approval | cCSAus Listed, General Purpose |

## Dimensions

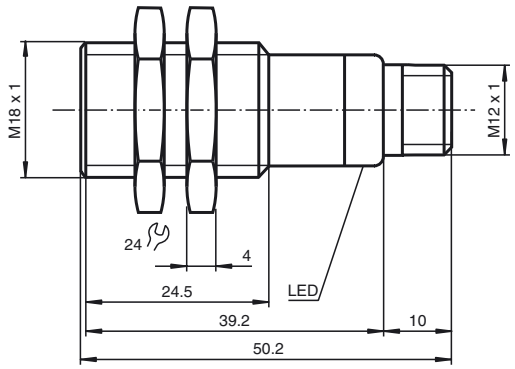


Release date: 2013-02-04 09:36 Date of issue: 2013-02-04 181224_eng.xml

Subject to reasonable modifications due to technical advances. Copyright Pepperl+Fuchs, Printed in Germany

## Electrical Connection

**Standard symbol/Connection:**
(version E2, pnp)

Receiver:

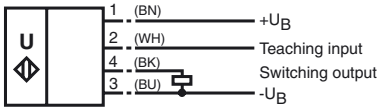


Emitter:

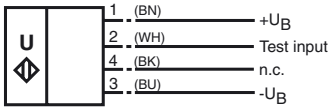


Core colours in accordance with EN 60947-5-2.

## Pinout

### Connector V1




## Accessories

**UB-PROG2**
Programming unit

**OMH-04**
Mounting aid for round steel ø 12 mm or sheet 1.5 mm ... 3 mm

**BF 18**
Mounting flange, 18 mm

**BF 18-F**
Mounting flange with dead stop, 18 mm

**BF 5-30**
Universal mounting bracket for cylindrical sensors with a diameter of 5 ... 30 mm

**V1-G-2M-PVC**
Cable socket, M12, 4-pin, PVC cable

**V1-W-2M-PUR**
Cable socket, M12, 4-pin, PUR cable

### Function

A through-beam ultrasonic barrier always consists of a single emitter and a single receiver. The function of a through-beam ultrasonic barrier is based in the interruption of the sound transmission to the receiver by the object to be detected.
The emitter sends an ultrasonic signal that is evaluated by the receiver. If the signal is interrupted or muted by the object to be detected, the receiver switches.
No electrical connections are required between the emitter and receiver.
The function of through-beam ultrasonic barriers is not dependent on the position of their installation. We recommend, however, to install the emitter below in the case of vertical installations to prevent the accumulation of dust particles.

### Startup and parameterising

For easy alignment of emitter and receiver towards each other, the receiver is equipped with an alignment aid. To activate the alignment aid, the TEACH-Input of the receiver (pin 2) has to be connected to ground ($-U_B$). The flashing frequency of the yellow LED indicates the strength of the received ultrasonic signal. The better the alignment, the stronger the signal.

## Additional Information

### Obstacle size

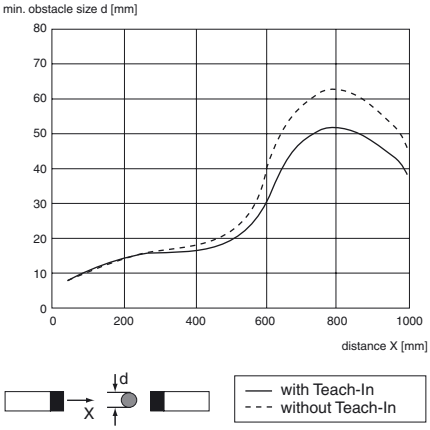


Release date: 2013-02-04 09:36 Date of issue: 2013-02-04 181224_eng.xml


Subject to reasonable modifications due to technical advances. Copyright Pepperl+Fuchs, Printed in Germany
Pepperl+Fuchs Group • Tel.: Germany +49 621 776-0 • USA +1 330 4253555 • Singapore +65 67799091 • Internet http://www.pepperl-fuchs.com

| LED yellow, flashing frequency | Description |
|---|---|
| slowly (appr. 1.5 Hz) | no signal |
| medium (appr. 3 Hz) | weak signal |
| fast (appr. 9 Hz) | strong signal |

Simultaneously the ultrasonic barrier evaluates the signal strength of the unobstructed signal path and generates the optimal switching threshold. When disconnecting the TEACH-input from $-U_B$ , this threshold is stored non-volatile in the receivers memory. In case of clear ultrasonic path (no object), all LEDs are off.

**TEACH-In of very small objects/obstacles**

Like shown in the curve "obstacle size", the ultrasonic barrier offers the possibility to detect very small objects at a distance of more than 300 mm.

- place the object to be detected in the desired distance inside the ultrasonic path
- connect TEACH-input of the receiver to $+U_B$ (yellow LED flashes slowly)
- disconnect TEACH-input

In case of successful TEACH-IN (object is detected reliable), the yellow LED is on and the taught detection threshold is stored non-volatile to the receivers memory.
In case of unsuccessful TEACH-IN (object too small or too porous for ultrasonic sound),the red LED flashes 5 times and the ultrasonic barrier continues normal operation with unmodified detection threshold value.

**Test function**

For test purpose, the ultrasonic emitter is equipped with a test input. In normal operation mode (test input not connected or connected to $-U_B$), the green LED of the emitter is on. If the test input is connected to $+U_B$ , the ultrasonic emitter gets deactivated and its LED changes into red. Simultaneously the receiver switches and its yellow LED goes on.

Release date: 2013-02-04 09:36 Date of issue: 2013-02-04 181224_eng.xml

Subject to reasonable modifications due to technical advances. Copyright Pepperl+Fuchs, Printed in Germany