

Model Number

UBE1000-18GM40-SE2-V1

Single head system

Features

- **Short design, 40 mm**
- **Function indicators visible from all directions**
- **Switch output**
- **Program input**
- **Integrated alignment aid**

Diagrams

Characteristic response curve

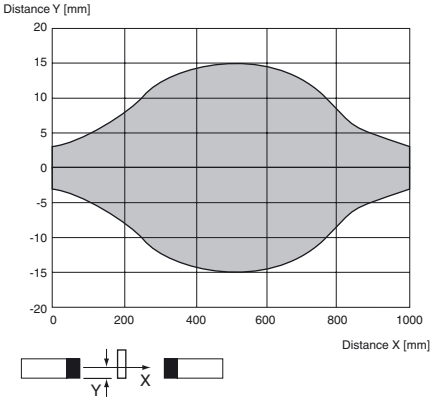

Obstacle: flat plate 100 mm x 100 mm

Technical data

General specifications	
Sensing range	15 ... 1000 mm
Standard target plate	100 mm x 100 mm
Transducer frequency	approx. 255 kHz
Indicators/operating means	
LED green	Power on
LED yellow	switching state
LED red	error, object uncertain
Electrical specifications	
Operating voltage U_B	10 ... 30 V DC , ripple 10 $\%_{SS}$
No-load supply current I_0	≤ 20 mA
Time delay before availability t_v	≤ 200 ms
Input	
Input type	1 program input free air path: -U_B ... +1 V, object: +6 V ... +U_B input impedance: > 4,7 kΩ program pulse: ≥ 1 s
Output	
Output type	PNP, NO
Rated operating current I_e	200 mA , short-circuit/overload protected
Voltage drop U_d	≤ 3 V
Switch-on delay t_{on}	< 5 ms
Switching frequency f	≤ 100 Hz
Ambient conditions	
Ambient temperature	-25 ... 70 °C (-13 ... 158 °F)
Storage temperature	-40 ... 85 °C (-40 ... 185 °F)
Mechanical specifications	
Connection type	Connector M12 x 1 , 4-pin
Degree of protection	IP67
Material	
Housing	brass, nickel-plated
Transducer	epoxy resin/hollow glass sphere mixture; foam polyurethane, cover PBT
Mass	25 g
Compliance with standards and directives	
Standard conformity	
Standards	EN 60947-5-2:2007 + A1:2012 IEC 60947-5-2:2007 + A1:2012
Approvals and certificates	
UL approval	cULus Listed, General Purpose
CSA approval	cCSAus Listed, General Purpose
CCC approval	CCC approval / marking not required for products rated ≤36 V

Dimensions

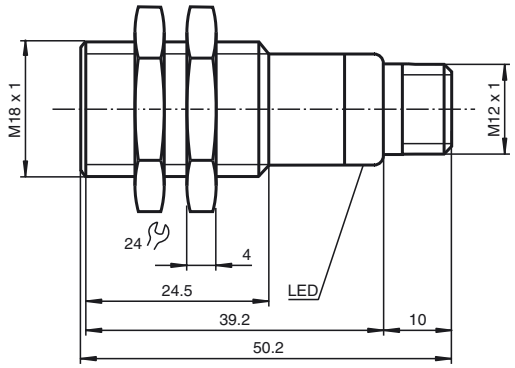

Release date: 2016-04-18 10:43 Date of issue: 2016-04-18 205346_eng.xml

Electrical Connection

Standard symbol/Connection:
(version E2, pnp)

Receiver:

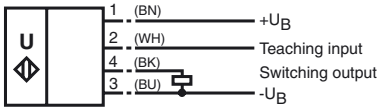

Emitter:

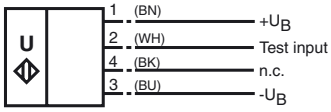

Core colours in accordance with EN 60947-5-2.

Pinout

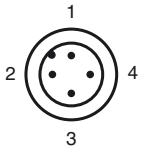

Wire colors in accordance with EN 60947-5-2

1	BN	(brown)
2	WH	(white)
3	BU	(blue)
4	BK	(black)

Accessories

UB-PROG2
Programming unit

OMH-04
Mounting aid for round steel ø 12 mm or sheet 1.5 mm ... 3 mm

BF 18
Mounting flange, 18 mm

BF 18-F
Mounting flange with dead stop, 18 mm

BF 5-30
Universal mounting bracket for cylindrical sensors with a diameter of 5 ... 30 mm

V1-G-2M-PVC
Female cordset, M12, 4-pin, PVC cable

V1-W-2M-PUR
Female cordset, M12, 4-pin, PUR cable

Function

A through-beam ultrasonic barrier always consists of a single emitter and a single receiver. The function of a through-beam ultrasonic barrier is based in the interruption of the sound transmission to the receiver by the object to be detected.
The emitter sends an ultrasonic signal that is evaluated by the receiver. If the signal is interrupted or muted by the object to be detected, the receiver switches.
No electrical connections are required between the emitter and receiver.
The function of through-beam ultrasonic barriers is not dependent on the position of

Additional Information

Obstacle size

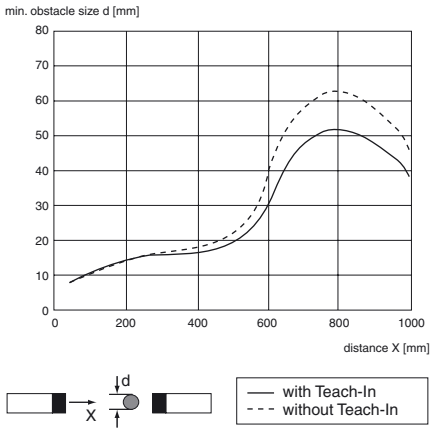

Release date: 2016-04-18 10:43 Date of issue: 2016-04-18 205346_eng.xml

their installation. We recommend, however, to install the emitter below in the case of vertical installations to prevent the accumulation of dust particles.

Startup and parameterising

For easy alignment of emitter and receiver towards each other, the receiver is equipped with an alignment aid. To activate the alignment aid, the TEACH-Input of the receiver (pin 2) has to be connected to ground ($-U_B$). The flashing frequency of the yellow LED indicates the strength of the received ultrasonic signal. The better the alignment, the stronger the signal.

LED yellow, flashing frequency	Description
slowly (appr. 1.5 Hz)	no signal
medium (appr. 3 Hz)	weak signal
fast (appr. 9 Hz)	strong signal

Simultaneously the ultrasonic barrier evaluates the signal strength of the unobstructed signal path and generates the optimal switching threshold. When disconnecting the TEACH-input from $-U_B$, this threshold is stored non-volatile in the receivers memory. In case of clear ultrasonic path (no object), only the receivers green LED is on.

TEACH-In of very small objects/obstacles

Like shown in the curve "obstacle size", the ultrasonic barrier offers the possibility to detect very small objects at a distance of more than 300 mm.

- place the object to be detected in the desired distance inside the ultrasonic path
- connect TEACH-input of the receiver to $+U_B$ (yellow LED flashes slowly)
- disconnect TEACH-input

In case of successful TEACH-IN (object is detected reliable), the yellow LED is on and the taught detection threshold is stored non-volatile to the receivers memory.
In case of unsuccessful TEACH-IN (object too small or too porous for ultrasonic sound),the red LED flashes 5 times and the ultrasonic barrier continues normal operation with unmodified detection threshold value.

Test function

For test purpose, the ultrasonic emitter is equipped with a test input. In normal operation mode (test input not connected or connected to $-U_B$), the green LED of the emitter is on. If the test input is connected to $+U_B$, the ultrasonic emitter gets deactivated and its LED changes into red. Simultaneously the receiver switches and its yellow LED goes on.

Release date: 2016-04-18 10:43 Date of issue: 2016-04-18 205346_eng.xml