

Model Number

UC10000-F260-UE9R2

Single head system

Features

- **Adjustable Bracket**
- **Large sensing range**
- **Programmable by means of Interface (see accessories) and SONPROG**
- **1 analog output, 0-10 V voltage source**
- **2 switch outputs**
- **Synchronization options**
- **Temperature compensation**

Description

This ultrasonic sensor is a contactless distance sensor based on the echo run time principle. It is suitable for the detection of solid, liquid or powder sound-reflecting objects. The unique sensor design allows easy movement of the direction of sound radiation in all spatial directions by up to 10° without additional an additional assembly device.

Diagrams

Characteristic response curve

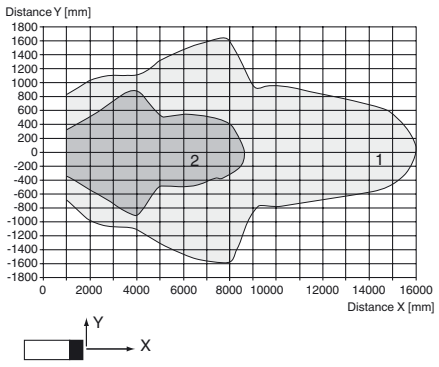

Curve 1: flat surface 100 mm x 100 mm
Curve 2: round bar, Ø 25 mm

Technical data

General specifications	
Sensing range	800 ... 10000 mm
Adjustment range	800 ... 10000 mm
Unusable area	0 ... 800 mm
Standard target plate	100 mm x 100 mm
Transducer frequency	approx. 60 kHz
Nominal ratings	
Time delay before availability t_v	280 ms
Limit data	
Permissible cable length	max. 300 m
Indicators/operating means	
LED yellow	solid: switching state switch output flashing: misadjustment
Electrical specifications	
Rated operating voltage U_e	24 V DC
Operating voltage U_B	15 ... 30 V (including ripple) In supply voltage interval 15 ... 20 V sensitivity reduced to 20% ... 0%
Ripple	≤ 10 %
No-load supply current I_0	≤ 75 mA
Input/Output	
Input/output type	1 synchronization connection, bidirectional
0 Level	≤ 3 V
1 Level	15 ... 30 V
Input impedance	typ. 0.9 kΩ
Number of sensors	max. 10
Switching output	
Output type	2 switch outputs PNP, NC
Repeat accuracy	± 15 mm
Operating current I_L	150 mA , short-circuit/overload protected
Voltage drop	≤ 3 V
Switch-on delay	800 ms
Analog output	
Output type	1 voltage output: 0 ... 10 V rising slope
Default setting	800 ... 10000 mm
Linearity error	≤ 1.5 %
Load resistor	> 2 kΩ
Ambient conditions	
Ambient temperature	-25 ... 70 °C (-13 ... 158 °F)
Storage temperature	-40 ... 85 °C (-40 ... 185 °F)
Shock resistance	30 g , 11 ms period
Vibration resistance	10 ... 55 Hz , Amplitude ± 1 mm
Mechanical specifications	
Connection type	screw terminals , PG 13.5 cable gland
Degree of protection	IP65
Material	
Housing	UP 1225 SF/R8
Transducer	epoxy resin/hollow glass sphere mixture; polyurethane foam
Installation position	any position
Mass	1800 g
Compliance with standards and directives	
Standard conformity	
Standards	EN 60947-5-2:2007 IEC 60947-5-2:2007

Approvals and certificates	
UL approval	cULus Listed, General Purpose
CSA approval	cCSAus Listed, General Purpose
CCC approval	CCC approval / marking not required for products rated ≤36 V

Release date: 2014-10-14 08:24 Date of issue: 2014-10-14 250795_eng.xml

Dimensions

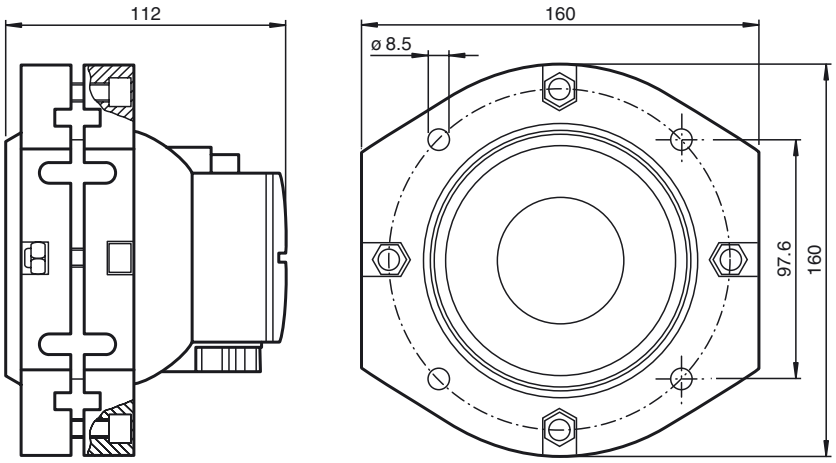

Electrical Connection

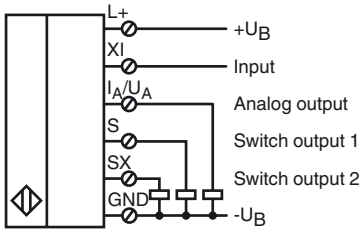

Accessories

DA5-IU-C
Digital display unit

3RX4000-PF
PC interface

V15S-G-2M-PVC
Cable connector, M12, 5-pin, PVC cable

V1-M20-80
Receptacles, M12/M20; plastic version

Danger!
This product must not be used in applications in which the safety of persons depends on the device function.
This product is not a safety component in accordance with the EU Machinery Directive.

Assembly and connection

When installing the sensor, make sure that the space filled by the sound cone is free from interfering objects. Objects in the blind zone cause cause false signals. Implement suitable measures to ensure that objects cannot enter the blind zone.
The electrical connection is made via screw terminals. The connections are protected against reverse polarity, short circuits and overloads. Shielded cables are recommended if there is electrical interference.

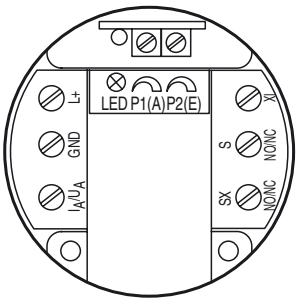

Setting

The detection range limits S_{min} and S_{max} are fixed (see Technical data). Within these limits, the switch points A and E are set using a potentiometer. Switch point A must be smaller than switch point E. If this is not the case, the LED flashes and correct switching is not possible.

Additional Information

Area definitions

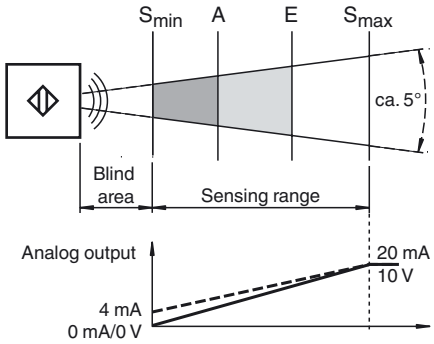

Release date: 2014-10-14 08:24 Date of issue: 2014-10-14 250795_eng.xml

Refer to "General Notes Relating to Pepperl+Fuchs Product Information".
Pepperl+Fuchs Group www.pepperl-fuchs.com
USA: +1 330 486 0001 fa-info@us.pepperl-fuchs.com
Germany: +49 621 776 4411 fa-info@de.pepperl-fuchs.com
Singapore: +65 6779 9091 fa-info@sg.pepperl-fuchs.com
PEPPERL+FUCHS SENSING YOUR NEEDS

Parameterisation via SONPROG

The following parameters can be changed via the SONPROG parameterisation software:

- Measuring range limits S_{min} and S_{max}
- Switch-on and switch-off points E and A
- Blind zone
- Averaging
- Analogue limits
- Analogue characteristic, rising/falling

Operation

Within the detection range, which is restricted by the detection range limits S_{min} and S_{max}, the object distance is detected. Objects with an even, smooth surface can have a maximum inclination of 3° to the direction of sound propagation. With rough, uneven surfaces the angular deviation can be bigger. The actual value depends signficantly on the object finish and should be obtained experimentally if necessary.

Behaviour of the switch outputs:

- If the object is at a distance > E, both switch outputs are in standby mode.
- If the object is between E and A, switch output S is activated and switch output SX is in standby mode.
- If the object is at a distance < A, switch output SX is activated and switch output S is in standby mode.

Behaviour of the analogue output:

The object distance between the detection range limits (S_{min}, S_{max}) are displayed in the form of an analogue output signal at the analogue output. The analogue output delivers its minimum value at distance S_{min} and its maximum value at distance S_{max}. The characteristic between the two measuring range limits is linear. Outside of S_{max} the analogue output retains its maximum value.

Display:

The sensor has an LED. It lights up continuously when the output terminal S is carrying a voltage. It flashes when switch points A and E are set incorrectly (see Setting).

Function input XI

The sensor is placed in standby mode by connecting a low level at the function input XI (blocked release). The sensors then performs no measurements. The switch outputs retain the most recent status. As soon as function input XI is disconnected from the low level or a high level is connected (release), the sensor resumes its normal function after the release period has expired.

The function input XI can be used during operation for the synchronisation of multiple sensors in the event of mutual interefence. The following synchronisation modes are possible:

- Triggering of each individual sensor with a separate control signal, e.g. by a PLC (external synchronisation).
- Connection of the function inputs XI of all sensors and joint triggering with an external control signal, e.g. by a PLC (external synchronisation, common-mode operation).
- Connection of the function inputs XI of all sensors and without triggering with an external signal (internal synchronisation, multiplex mode).

Maintenance

The ultrasonic sensor is maintenance-free. However, the converter surface must not be wet, damaged, painted or covered with material deposits..

Connecting the PC interface 3RX4000-PF to use SONPROG

This sensor can be parameterised using SONPROG for an optimum adaptation to the application. Therefore the sensor provides communication with the 3RX4000-PF PC interface. To connect to the 3RX4000-PF PC interface a 4- or 5-pin M12 male cable connector is reqired. We recommend e. g. an adapter V1-M20-80 or a cable connector V15S-G-2M-PVC.

Please connect the wires to the sensors terminals as shown, below.

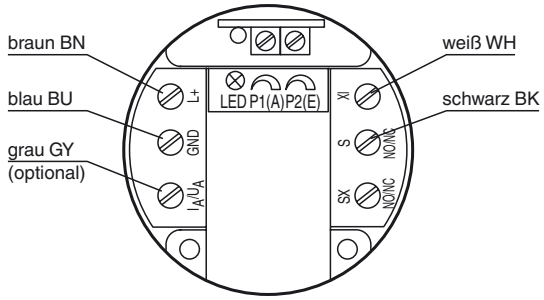

The terminals I_A/U_A (analog output) and SX (2nd switching output) are not needed for programming.

Release date: 2014-10-14 08:24 Date of issue: 2014-10-14 250795_eng.xml