

Model Number

UC500-D1-3K-V7

Single head system

Features

- **Specially for level monitoring in vessels**
- **Large operating voltage range 10 V DC ... 253 V DC 20 V AC ... 253 V AC**
- **3 relay outputs**
- **Parameter assignment via DIP-switches**
- **Temperature compensation**
- **Cable socket included with delivery**

Diagrams

Characteristic response curves

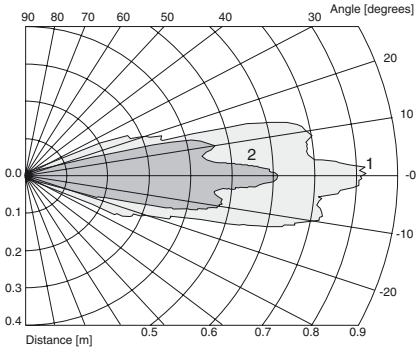

Curve 1: flat surface 100 mm x 100 mm
Curve 2: round bar, Ø 25 mm

Technical data

General specifications	
Sensing range	60 ... 550 mm
Dead band	0 ... 60 mm
Standard target plate	100 mm x 100 mm
Transducer frequency	approx. 380 kHz
Response delay	> 10 s, relay < 1 s, LEDs
Indicators/operating means	
LED red	LED 1: overfill indication LED 4: underfill indication
LED green/yellow	LED 2: overfill warning and normal operation LED 3: normal operation and underfill warning
DIP switch	setting of the switch points/operating modes
Electrical specifications	
Operating voltage U_B	10 ... 253 V DC 20 ... 253 V AC , 47 ... 63 Hz
No-load supply current I_0	< 30 mA with U_B = 30 V DC < 110 mA at U_B = 10 V DC < 25 mA at U_B = 220 V AC
Output	
Output type	3 relay outputs, normally open/closed, selectable
Range hysteresis H	20 mm
Contact loading	253 V AC/150V DC, 3 A (ohm. load)
Life span	electrical: 10^5 switching cycles with ohmic load (3 A/253 V AC or 3 A/30 V DC) minimum contact load: 100 µA/100 mV DC mechanical: 20 x 10^6 switching cycles
Temperature influence	< 4 %
Fusing	≤ 3 A Slow-blow fuse per output in accordance with IEC 60127-2 Sheet 5 required. Recommendation: after a short circuit, check that the device is functioning correctly.
Ambient conditions	
Ambient temperature	-20 ... 60 °C (-4 ... 140 °F)
Storage temperature	-40 ... 85 °C (-40 ... 185 °F)
Mechanical specifications	
Degree of protection	IP65
Connection	Female connector, V7 (7-pin), 90° Wire cross section: ≤1.5 mm² cable diameter Ø7 ... 9 mm
Material	
Housing	cover: PC housing: PBT threaded flange: stainless steel installation connector/cable socket: PETP
Transducer	epoxy resin/hollow glass sphere mixture; polyurethane foam
Mass	700 g
Note	In case of loss or damage, the cable socket must be replaced by an identical cable socket (type V7-W) from Pepperl+Fuchs!
Compliance with standards and directives	
Standard conformity	
Standards	EN 60947-5-2:2007+A1:2012 IEC 60947-5-2:2007 + A1:2012
Approvals and certificates	
EAC conformity	TR CU 004/2011 TR CU 020/2011
CCC approval	Certified by China Compulsory Certification (CCC)

Release date: 2017-08-24 08:53 Date of issue: 2017-08-24 212371_eng.xml

Dimensions

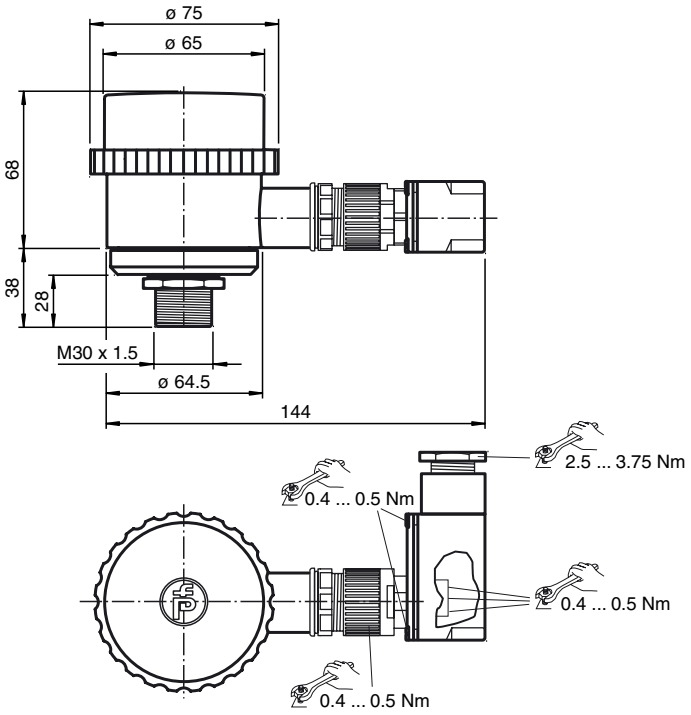

Electrical Connection

Standard symbol/Connection:

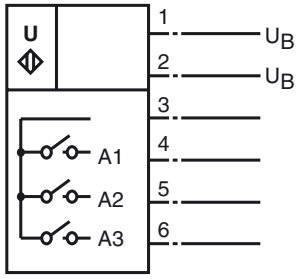

Pinout

Connector V7



Additional Information

Indicators/operating means

LED	S4 = OFF	S4 = ON
1 ⊗ (red)	full	full
2 ⊗ (green/yellow)	high	normal
3 ⊗ (green/yellow)	normal	low
4 ⊗ (red)	empty	empty

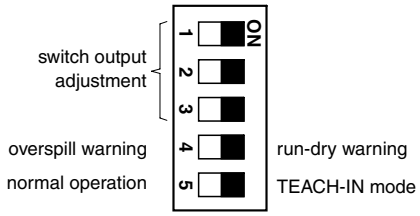

Release date: 2017-08-24 08:53 Date of issue: 2017-08-24 212371_eng.xml

Refer to “General Notes Relating to Pepperl+Fuchs Product Information”.

PEPPERL+FUCHS
SENSING YOUR NEEDS

Safety notes:

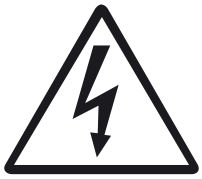

The supply circuit is separated from the relay circuit by basic insulation.

The cover may only be opened by specially trained personnel. Pollution degree 2 is permissible when the cover is open. Ensure that the sealing ring of the cover is in good condition.

Protection class II is only guaranteed when using the recommended cable socket. The cable box may only be separated from the unit when the power is off.

The connector pin 7 of the connector is not connected to the sensor. An eventually present earth connection in the cable socket therefore will not be looped into the sensor.

CAUTION:
The UC500-D1-K3-V7 ultrasonic sensor is not suitable for use in environments subject to explosion hazards.

Conformity:	EN 60947-5-2
Housing insulation:	Protection class II
Pollution degree:	4 (process face)
	3 (housing- and connector side)
Overvoltage category:	III

TEACH-IN of switching points:

One switching point can be taught for each of the 3 switch outputs. Set DIP switch 5 to ON to put the sensor in TEACH-IN mode. The sensor indicates TEACH-IN mode with two lit red LEDs. The green-yellow LEDs are off.
Next, position a suitable target object at the desired switching point in front of the sensor and switch the DIP switch associated with the relevant switch output (switches 1-3). The sensor will now be flashing yellow or green in addition to the lit red LEDs. Flashing green indicates that the target object was detected; flashing yellow signals that it was not detected. The measured switching point will be transferred to RAM when the associated DIP switch is switched back while the LED is flashing green. Only the red LEDs should now be lit. This signals the user that the DIP switches 1-3 have been restored to their original positions. The other switching points are set in the same manner. The TEACH-IN procedure is completed by setting DIP switch 5 back to the OFF position. The measured switching points will then be transferred to the nonvolatile EEPROM.
Under normal circumstances, switching point A1 should be less than A2, and A2 less than A3. If this is not observed, the sensor will automatically exchange the switching points after the TEACH-IN procedure is complete so that A1 < A2 < A3. This ensures that the LEDs respond correctly and that the shortest switching point is assigned to relay 1, the middle distance to relay 2 and the longest distance to relay 3.
If DIP switch 4 is switched during TEACH-IN, the default value for the switching point will be set rather than a target object. The default values for the switching points are 60 mm for A1, 220 mm for A2 and 270 mm for A3.

Display during TEACH-IN:

DIP1-3	one or more DIP switches changed TEACH-IN active			in normal state TEACH-IN complete	
DIP4	normal state TEACH-IN of object distance		changed default parameter	normal state	changed
State	object detected	object not detected	default active		
LED 1, red	lit	lit	lit	lit	lit
LED 2, green/yellow	flashes green	off	lit green	off	lit green
LED 3, green/yellow	off	flashes yellow	lit yellow	off	lit yellow
LED 4, red	lit	lit	lit	lit	lit

The relays switch to the "safe state" (all relays open, regardless of close/open function) during TEACH-IN.

Setting the switching behaviour:

In normal mode (DIP switch 5 OFF), the DIP switches 1 to 3 can be used to set the switching behaviour of the switch outputs 1 to 3. If the associated DIP switch is ON, the associated switch output has a close function; if the switch is set to OFF the output has an open function. Close function means that the relay trips when the object distance is less than the associated switching point; in the case of open function, the relay trips when the object distance is greater than the switching point.
The relays switch to the "safe state" (all relays open, regardless of close/open function) in the event of a failure

Setting the display modes:

Two display modes can be selected with DIP switch 4:

Release date: 2017-08-24 08:53 Date of issue: 2017-08-24 212371_eng.xml

Display mode 1: DIP switch 4 ON, underfill warning:

Object distance x	x < A1	A1 < x < A2	A2 < x < A3	x > A3
LED 1, red (full)	flashes	off	off	off
LED 2, green/yellow (normal)	off	lit green	off	off
LED 3, green/yellow (low)	off	off	flashes yellow	off
LED 4, red (empty)	off	off	off	flashes

In this mode LED 1 (red) serves as the overfilling indicator, LED 2 (green) indicates the normal state, LED 3 (yellow) serves as the preliminary warning that the container is nearly empty and LED 4 (red) signalises the "container empty" state.

Display mode 2: DIP switch 4 OFF, overfill warning

Object distance x	x < A1	A1 < x < A2	A2 < x < A3	x > A3
LED 1, red (full)	flashes	off	off	off
LED 2, green/yellow (high)	off	flashes yellow	off	off
LED 3, green/yellow (normal)	off	off	lit green	off
LED 4, red (empty)	off	off	off	flashes

In this mode LED 1 (red) serves as the overfilling indicator, LED 2 (yellow) serves as the preliminary warning that the container is nearly full, LED 3 (green) indicates the normal state, and LED 4 (red) signalises the "container empty" state.

The relays switch to the "safe state" (all relays open, regardless of close/open function) in the event of a failure.

Release date: 2017-08-24 08:53 Date of issue: 2017-08-24 212371_eng.xml