

Model Number

IC-KP-R2-V1

Control interface unit IDENTControl with serial interface RS-232

Features

- Max. 4 read/write heads connectable
- Alternative 2 read/write heads and 2 trigger sensors can be connected
- LC display with background lightning
- Direct operation via 4 keys
- LED status indicator of bus communication and read/write heads

Dimensions

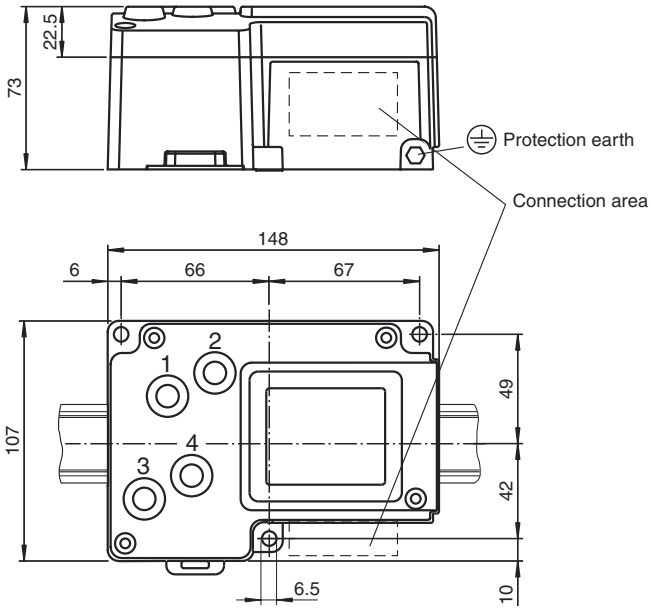

Electrical connection

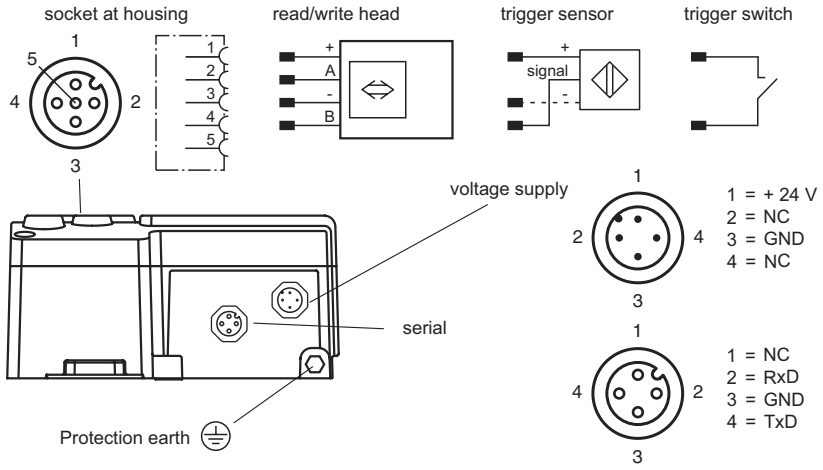

Indicating / Operating means

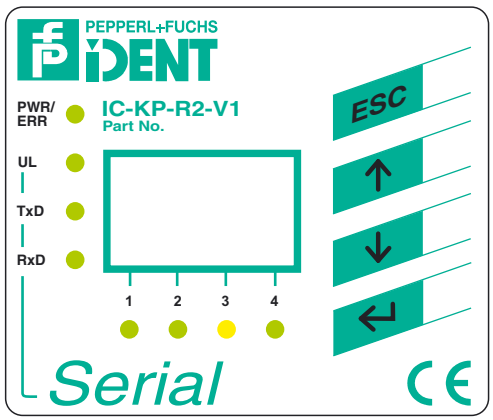

Release date: 2015-03-26 12:23 Date of issue: 2015-03-26 126457_eng.xml

Technical data

General specifications		
Number of read/write heads		max. 4 alternative 2 read/write heads and 2 trigger sensors
UL File Number		E87056
Functional safety related parameters		
$MTTF_d$		190 a
Mission Time (T_M)		10 a
Diagnostic Coverage (DC)		0 %
Indicators/operating means		
LEDs 1, 2, 3, 4		Status indicator for read/write heads green: command at read/write head active yellow: approx. 1 second long, if command was successfully executed
LED PWR/ERR		green: power on red: Hardware fault
LED UL		green: Interface Power ON/OK
LED TxD		green: flashes in rhythm with the transmitted data
LED RxD		green: flashes in rhythm of receiving data
LC display		two-line multi-function display with 12 characters per line configuration of the control interface and display of connected read/write heads as additional pictograms; easy and direct selection of operating commands
Button		4 keys: ESC, up, down and return
Electrical specifications		
Rated operating voltage	U_e	20 ... 30 V DC , PELV
Ripple		≤ 10 % at 30 V DC
Current consumption		≤ 2 A incl. read/write heads
Power consumption	P_0	2.5 W Without read/write heads
Electrical isolation		basic insulation acc. to DIN EN 50178, rated insulation voltage of 50 V_{eff}
Interface		
Physical		RS 232
Protocol		ASCII
Transfer rate		1200; 2400; 4800; 9600; 19200; 38400 Bit/s
Ambient conditions		
Ambient temperature		-25 ... 70 °C (-13 ... 158 °F)
Storage temperature		-30 ... 80 °C (-22 ... 176 °F)
Climatic conditions		air humidity max. 96 % Salt spray resistant to EN 60068-2-52
Shock and impact resistance		Oscillation (Sine): 5 g, 10 - 1000 Hz to EN 60068-2-6 Shock (Half-sine): 30 g, 11 ms in accordance with EN 60068-2-27
Mechanical specifications		
Degree of protection		IP67
Connection		Read/write heads: shielded, 4-pin, M12 connector Power supply: M12 connector Protective earth: M6 earthing screw RS 232: M12 plug connection
Material		
Housing		powder coated aluminum
Installation		snap-on to 35 mm standard rail or screw fixing
Mass		approx. 1000 g
Compliance with standards and directives		
Standard conformity		
Electromagnetic compatibility		EN 61326:2003
Degree of protection		IEC 60529:2001

Function

The innovative concept of the RFID identification system **IDENT***Control* from Pepperl+Fuchs has many advantages in comparison to other systems. The core piece of the system is the evaluation unit **IDENT***Control*.
Thanks to the integrated interfaces for all standard field bus systems such as PROFIBUS, EtherNet, PROFINET IO, DeviceNet, serial connections (RS 232/RS 485/RS 422) and numerous connection options for inductive write/read heads as well as microwave antennas, the evaluation unit **IDENT***Control* can be adjusted to your needs in a flexible and easy manner.
4 function keys and a double-spaced illuminated LC display facilitate easy system configuration, parameter assignment and entering commands. Further LEDs indicate operating power and bus communication, connected write/read heads and active write/read commands.
Mounting the unit onto DIN mounting rails is easy thanks to the snap-fits on the back of the housing of the evaluation unit **IDENT***Control* .
With its L-shaped housing, the evaluation unit including bus connector fits into a 120 mm grid in the switch cabinet. The mounting depth of 70 mm furthermore enables installation in flat switch boxes with a depth of only 100 mm.
There are 3 further mounting holes for field mounting.

Accessories

V1S-G-0,15M-PUR-ABG-SUBD
Adapter M12 on Sub-D for PC connection with null modem cable

V1-G-5M-PUR-ABG-V1-W
Connecting cable, M12 to M12, PUR cable 4-pin, shielded

IVZ-K-R2
Null modem cable

V1-G-5M-PUR
Female cordset, M12, 4-pin, PUR cable

RFIDControl
Software for RFID identification systems

Release date: 2015-03-26 12:23 Date of issue: 2015-03-26 126457_eng.xml

Refer to “General Notes Relating to Pepperl+Fuchs Product Information”.
Pepperl+Fuchs Group www.pepperl-fuchs.com
USA: +1 330 486 0001 fa-info@us.pepperl-fuchs.com
Germany: +49 621 776 4411 fa-info@de.pepperl-fuchs.com
Singapore: +65 6779 9091 fa-info@sg.pepperl-fuchs.com
PEPPERL+FUCHS SENSING YOUR NEEDS