

Model number

VAA-4E4A-G2-ZA/EA2

G2 flat module
4 inputs (PNP) and 4 electronic outputs

Features

- AS-Interface certificate
- Degree of protection IP67
- Addressing jack
- Flat cable connection with cable piercing technique, variable flat cable guide
- Communication monitoring
- Inputs for 2-, 3-, and 4-wire sensors
- Power supply of outputs from the external auxiliary voltage
- Supply for inputs from AS-Interface
- Ground connection (FE) possible
- Function display for bus, ext. auxiliary voltage, inputs and outputs
- Detection of overload on sensor supply
- Detection of output overload

Dimensions

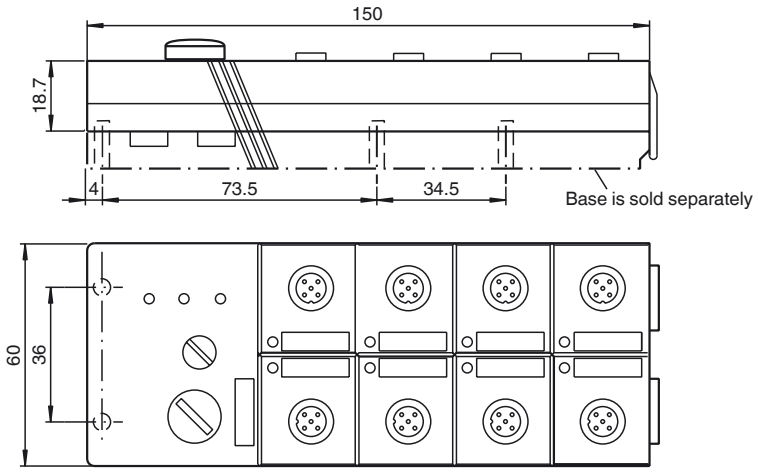

Electrical connection

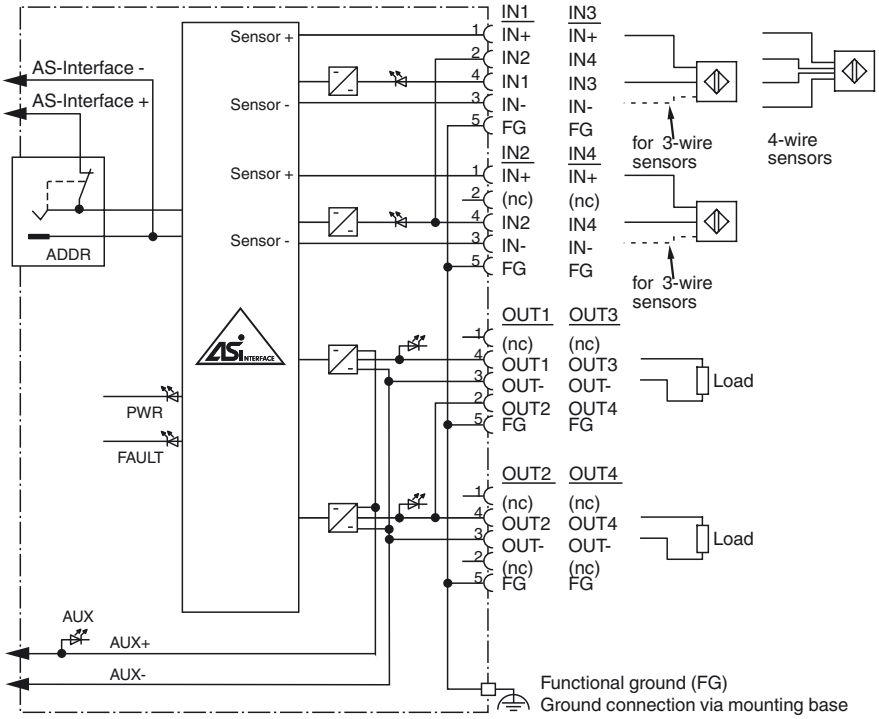

Indicating / Operating means

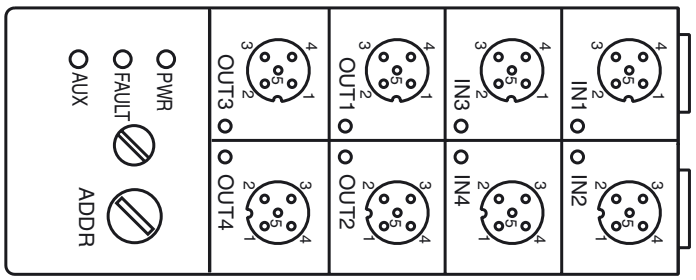

Release date: 2018-01-24 15:58 Date of issue: 2018-01-24 188848_eng.xml

Technical data

General specifications		
Slave type		Standard slave
AS-Interface specification		V3.0
Required master specification		≥ V2.0
UL File Number		E223772
Functional safety related parameters		
$MTTF_d$		140 a
Mission Time (T_M)		20 a
Diagnostic Coverage (DC)		0 %
Indicators/operating means		
LED FAULT		error display; LED red red: communication error or address is 0 red flashing: overload of sensor power supply or outputs
LED PWR		AS-Interface voltage; LED green
LED AUX		ext. auxiliary voltage U_{AUX} ; LED green
LED IN		switching state (input); 4 LED yellow
LED OUT		Switching state (output); 4 LED yellow
Electrical specifications		
Auxiliary voltage (output)	U_{AUX}	20 ... 30 V DC PELV
Rated operating voltage	U_e	26.5 ... 31.6 V from AS-Interface
Rated operating current	I_e	≤ 40 mA (without sensors) / max. 220 mA
Protection class		III
Surge protection		U_{AUX}, U_{in}: Over voltage category III, safe isolated power supplies (PELV)
Input		
Number/Type		4 inputs for 2- or 3-wire sensors (PNP), DC option 2 inputs for 4-wire sensors (PNP), DC
Supply		from AS-Interface
Voltage		21 ... 31 V
Current loading capacity		≤ 180 mA (T_B ≤ 40 °C), ≤ 140 mA (T_B ≤ 60 °C), , overload and short-circuit protected
Input current		≤ 9 mA (limited internally)
Switching point		according to DIN EN 61131-2 (Type 2)
0 (unattenuated)		≤ 3 mA
1 (attenuated)		≥ 5 mA
Signal delay		< 2 ms (input/AS-Interface)
Signal frequency		≤ 250 Hz
Output		
Number/Type		4 electronic outputs, PNP, overload and short-circuit proof
Supply		from external auxiliary voltage U_{AUX}
Current		2 A per output Sum 4 A (T_B ≤ 40 °C) Sum 3 A (T_B ≤ 60 °C)
Voltage		≥ (U_{AUX} - 0.5 V)
Directive conformity		
Electromagnetic compatibility		
Directive 2014/30/EU		EN 62026-2:2013 EN 61000-6-2:2001 EN 61000-6-4:2001
Standard conformity		
Degree of protection		EN 60529:2000
Fieldbus standard		EN 62026-2:2013
Input		EN 61131-2:2007
Emitted interference		EN 61000-6-4:2001
AS-Interface		EN 62026-2:2013
Noise immunity		EN 61000-6-2:2001
Programming instructions		
Profile		S-7.F
IO code		7
ID code		F
ID1 code		F
ID2 code		E
Data bits (function via AS-Interface)		**input** / **output**
D0		IN1 / OUT1
D1		IN2 / OUT2
D2		IN3 / OUT3
D3		IN4 / OUT4
Parameter bits (programmable via AS-i)		**function**
P0		communication monitoring P0 = 1 (default settings), monitoring = ON, i.e. if communication fails, the outputs are de-energised P0 = 0, monitoring = OFF, if communication fails, the outputs maintain their condition
P1		not used
P2		not used
P3		not used
Ambient conditions		

Function

The VAA-4E4A-G2-ZA/EA2 is an AS-Interface module with 4 Inputs and 4 outputs. Mechanical contacts (e. g. push buttons) as well as 2-, 3- and 4-wire sensors can be connected to the inputs. The outputs are electronic outputs, which can be collectively loaded with 24 V DC and 1 A per output.
The IP67 flat module is ideal for applications in the field. An addressing jack is integrated in the module.
The connection for the sensors/actuators is via M12 x 1 screw connections. An LED is provided on the top of the module, for each channel, to indicate the current switching status. Similarly, an LED is provided to monitor the AS-Interface communication and to indicate that the module has the address 0. LEDs are also provided to indicate AS-Interface voltage and external power supply.
The mounting plate U-G2FF is used as standard for the connection to the AS-Interface flat cable and the external 24 V DC supply. The specially designed base enables the user to connect flat cable from both sides.
The device incorporates communication monitoring, which switches off power to the outputs if no communication has taken place on the AS-Interface line for longer than 40 ms.
An overloading of the internal input supply or of the outputs is signalled to the AS-interface master via the "Peripheral fault" function. Communication via the AS-Interface remains intact.

Note:
The mounting base for the module is sold separately.

Accessories

VBP-HH1-V3.0-KIT
AS-Interface Handheld with accessory

VBP-HH1-V3.0
AS-Interface Handheld

VAZ-PK-1,5M-V1-G
Adapter cable module/hand-held programming device

VAZ-FK-ED-G2
AS-Interface end seal for G2 modules

Matching system components

U-G2FF
AS-Interface module mounting base for connection to flat cable (AS-Interface and external auxiliary power)

Release date: 2018-01-24 15:58 Date of issue: 2018-01-24 188848_eng.xml

Ambient temperature	-25 ... 60 °C (-13 ... 140 °F)
Storage temperature	-25 ... 85 °C (-13 ... 185 °F)
Relative humidity	85 % , noncondensing
Climatic conditions	For indoor use only
Altitude	≤ 2000 m above MSL
Pollution degree	3
Mechanical specifications	
Degree of protection	IP67
Connection	Cable piercing method flat cable yellow/flat cable black inputs/outputs: M12 round connector
Material	
Housing	PBT
Mass	150 g
Tightening torque, cable gland	0.4 Nm
Mounting	Mounting plate

Notes

For 4-wire sensors, it is only possible to use plug-in slot IN1 or IN3 for inputs 1+2 or 3+4 (jumpered internally).

Do not connect inputs and outputs, which are supplied via the module from AS-interface or via auxiliary power, with power supply and signal circuits with external potentials.

Release date: 2018-01-24 15:58 Date of issue: 2018-01-24 188848_eng.xml