

Spec. 3.0

Model number

VBA-4E-G16-ZEJ

G16 compact module
4 inputs (PNP)

Features

- Compact design
- Connections via round connector
- AS-Interface connection via M12 metal threaded insert with SPEEDCON
- Function display for bus and inputs
- Degree of protection IP67 / IP68 / IP69K
- Inputs for 2- and 3-wire sensors
- Supply for inputs from AS-Interface
- Communication monitoring
- Detection of overload on sensor supply

Dimensions

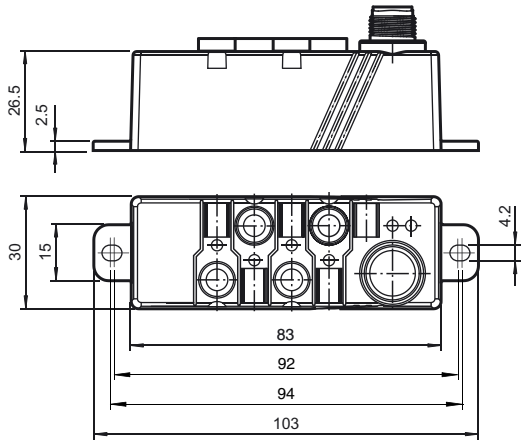

Electrical connection

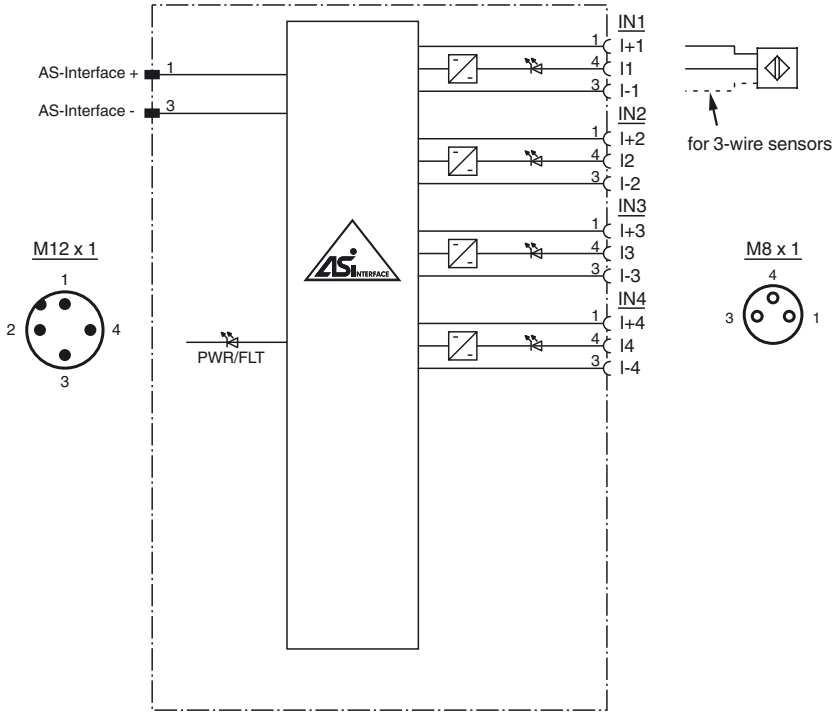

Indicating / Operating means

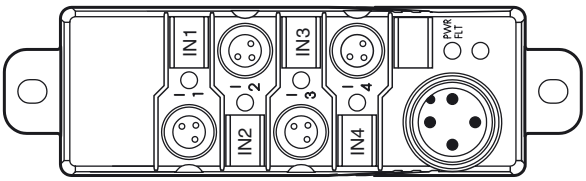

Release date: 2015-10-08 14:47 Date of issue: 2016-07-11 188850_eng.xml

Technical data

General specifications		
Slave type		A/B slave
AS-Interface specification		V3.0
Required master specification		≥ V2.1
UL File Number		E223772
Functional safety related parameters		
$MTTF_d$		390 a
Mission Time (T_M)		20 a
Diagnostic Coverage (DC)		0 %
Indicators/operating means		
LED PWR/FAULT		Status display; multi-colour LED Green: normal operation Red: communication fault Flashing yellow/red: address 0 Flashing green/red: sensor supply overload
LED IN		switching state (input); 4 LED yellow
Electrical specifications		
Rated operating voltage	U_e	26.5 ... 31.6 V from AS-Interface
Rated operating current	I_e	≤ 40 mA (without sensors) / max. 240 mA
Protection class		III
Surge protection		U_e: Over voltage category III, safe isolated power supplies (PELV)
Input		
Number/Type		4 inputs for 2- or 3-wire sensors (PNP), DC
Supply		from AS-Interface
Voltage		21 ... 31 V
Current loading capacity		≤ 200 mA (T_B ≤ 40 °C), ≤ 150 mA (T_B ≤ 70 °C), overload-proof and short-circuit protected
Input current		≤ 9 mA (limited internally)
Switching point		according to DIN EN 61131-2 (Type 2)
0 (unattenuated)		≤ 3 mA
1 (attenuated)		≥ 5 mA
Signal delay		< 1 ms (input/AS-Interface)
Programming instructions		
Profile		S-0.A.0
IO code		0
ID code		A
ID1 code		7
ID2 code		0

Data bits (function via AS-Interface)	input	output
D0	IN1	-
D1	IN2	-
D2	IN3	-
D3	IN4	-

Parameter bits (programmable via AS-i)	**function**
P0	not used
P1	Input filter P1 = 0 input filter on, pulse suppression ≤ 2 ms P1 = 1 input filter off (default settings)
P2	Synchronous mode P2 = 0 synchronous mode on P2 = 1 synchronous mode off (default settings)
P3	not used

Ambient conditions		
Ambient temperature		-25 ... 70 °C (-13 ... 158 °F)
Storage temperature		-25 ... 85 °C (-13 ... 185 °F)
Relative humidity		85 % , noncondensing
Climatic conditions		For indoor use only
Altitude		≤ 2000 m above MSL
Shock and impact resistance		30 *g*, 11 ms in 6 spatial directions 3 shocks 10 *g*, 16 ms in 6 spatial directions 1000 shocks
Vibration resistance		0.75 mm 10 ... 57 Hz , 5 g 57 ... 150 Hz, 20 cycles
Pollution degree		3
Mechanical specifications		
Degree of protection		IP67 / IP68 / IP69k
Connection		AS-Interface: M12 x 1 quick disconnect actuators: M8 x 1 quick disconnect
Material		
Housing		PBT
Mass		100 g
Tightening torque, cable gland		0.4 Nm (M12 connector), 0.2 Nm (M8 connector)
Mounting		screw mounting
Compliance with standards and directives		

Function

The VBA-4E-G16-ZEJ is an AS-Interface compact module with 4 inputs. 2- and 3-wire sensors as well as mechanical contacts can be connected to the plus switching electronic inputs.
The particularly slim design with 30 mm is ideally suited for the common profile widths with simple sliding block mounting or screw fitting in narrow shafts. To guarantee the protection category the electronics is compound-filled.
All module connections are implemented with metal inserts for high stability. The connection to the AS-Interface cable is achieved via a M12 x 1 circular connector with SPEEDCON quick locking option. The advantage of the plug-connection is that no separate base is required. For addressing a standard cable with M12 x 1 screw connections can also be used. The connections to the sensors are made via M8 x 1 screw connections.
The inputs and the connected sensors are supplied via the internal power supply of the module (from AS-Interface).
To indicate the current switching state there is an LED for each channel fitted to the top of the module.
An LED to indicate the AS-Interface voltage, to monitor the AS-Interface communication, and to indicate that the module has an address of 0, is also available.
The module can be fitted in any position using two screws.

Accessories

VBP-HH1-V3.0-KIT
AS-Interface Handheld with accessory

VAZ-T1-FK-0,3M-PUR-V1-G
Splitter box AS-Interface to 1x M12 round connector

V1-G
Female connector, M12, 4-pin, field attachable

VAZ-V3-B
Blind plug for M8 sockets

VBP-HH1-V3.0
AS-Interface Handheld

Release date: 2015-10-08 14:47 Date of issue: 2016-07-11 188850_eng.xml

Directive conformity	
EMC Directive 2004/108/EC	EN 61000-6-2:2005, EN 61000-6-4:2007, EN 50295:1999
Standard conformity	
Noise immunity	EN 61000-6-2:2005, EN 50295:1999
Emitted interference	EN 61000-6-4:2007
Input	EN 61131-2
Degree of protection	EN 60529
Fieldbus standard	EN 50295, IEC 62026-2

Release date: 2015-10-08 14:47 Date of issue: 2016-07-11 188850_eng.xml