System connection - PLC-V8/FLK14/IN - 2296553

Please be informed that the data shown in this PDF Document is generated from our Online Catalog. Please find the complete data in the user's documentation. Our General Terms of Use for Downloads are valid (http://phoenixcontact.com/download)

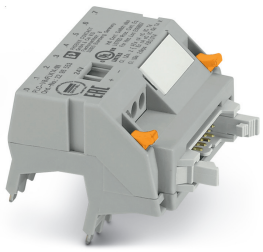

V8 adapter for 8 x PLC-INTERFACE (6.2 mm), controller: PLC system cabling of input cards, connection 1: Screw connection 1x, connection 2: IDC/FLK pin strip 1x 14-position, connection 3: Plug connection (Can be snapped onto 8x PLC-INTERFACE terminals), number of channels: 8, control logic: positive switching

RoHS

Key Commercial Data

Packing unit	1 pc
GTIN	4 017918 189150
GTIN	4017918189150
Weight per Piece (excluding packing)	58.000 g
Custom tariff number	85366990
Country of origin	Germany

Technical data

Dimensions

Width	50 mm
Height	39 mm
Depth	56 mm

Ambient conditions

Ambient temperature (operation)	-40 °C ... 70 °C
Ambient temperature (storage/transport)	-40 °C ... 70 °C
Degree of protection	IP20

General

Max. permissible operating voltage	30 V DC
Nominal voltage U_N	24 V DC

System connection - PLC-V8/FLK14/IN - 2296553

Technical data

General

Max. perm. current (per branch)	1 A (per signal path)
Max. permissible current (separate power supply)	3 A
Number of positions	14
Status display	Green LED
Mounting position	any
Assembly instructions	In rows with zero spacing

Connection data

Connection name	Supply
Connection in acc. with standard	IEC / EN
Connection method	Screw connection
Stripping length	8 mm
Screw thread	M3
Number of connections	1
Conductor cross section solid	0.2 mm² ... 4 mm²
Conductor cross section flexible	0.2 mm² ... 2.5 mm²
Conductor cross section AWG	24 ... 12

Connection data 2

Connection name	Controller level
Connection method	IDC/FLK pin strip
Number of connections	1
Number of positions	14
Pitch	2.54 mm

Connection data 3

Connection name	Field level
Connection method	Plug connection
Note	Can be snapped onto 8x PLC-INTERFACE terminals

Supported controller

Controller	SIEMENS S7-1500
- suitable I/O card	6ES7521-1BH00-0AB0
	6ES7521-1BL00-0AB0
Controller	ABB S800 I/O
- suitable I/O card	DI810
	DI818
	DI830
	DI840

System connection - PLC-V8/FLK14/IN - 2296553

Technical data

Supported controller

Controller	ALLEN-BRADLEY ControlLogix
- suitable I/O card	1756-IB32
	1756-IB16
Controller	ALLEN-BRADLEY PLC 5
- suitable I/O card	1771 IBN
Controller	ALLEN-BRADLEY SLC 500
- suitable I/O card	1746 IB 32
Controller	SIEMENS S7-400
- suitable I/O card	6ES7 421-1BL01-0AA0
Controller	HONEYWELL Experion PKS C200
- suitable I/O card	TC-IDD 321
Controller	MITSUBISHI MELSEC Q
- suitable I/O card	QX81
	QX82
	QX82-S1
Controller	MITSUBISHI MELSEC L
- suitable I/O card	LX41C4
	LX42C4
Controller	SIEMENS S7-300 / ET 200 M
- suitable I/O card	CPU 313C-2DP
	CPU 314C-2DP
	CPU 314C-2PtP
	6ES7 321-1BH02-0AA0
	6ES7 321-1BL00-0AA0
	6ES7 323-1BH01-0AA0
	6ES7 323-1BL00-0AA0
	6ES7 321-1BH10-0AA0
	CPU 313C
	CPU 313C-2PtP
Controller	Schneider Electric Modicon TSX QUANTUM
- suitable I/O card	DDI 353
	DDI 853
Controller	Emerson DeltaV
- suitable I/O card	VE4001S2T2B3
Controller	GE-FANUC RX3i
- suitable I/O card	IC694MDL660
Controller	YOKOGAWA CS3000 CentumVP

System connection - PLC-V8/FLK14/IN - 2296553

Technical data

Supported controller

- suitable I/O card	ADV151
	ADV161
Controller	YOKOGAWA STARDOM
- suitable I/O card	NFDV151
	NFDV161

Standards and Regulations

Connection in acc. with standard	CUL
Standards/regulations	IEC 60664
	DIN EN 50178
Rated insulation voltage	50 V
Rated surge voltage	0.5 kV (Functional insulation)
Pollution degree	2
Overvoltage category	II
Flammability rating according to UL 94	V0

Environmental Product Compliance

REACh SVHC	Lead 7439-92-1
China RoHS	Environmentally Friendly Use Period = 50 years
	For details about hazardous substances go to tab “Downloads”, Category “Manufacturer's declaration”

Drawings

Circuit diagram

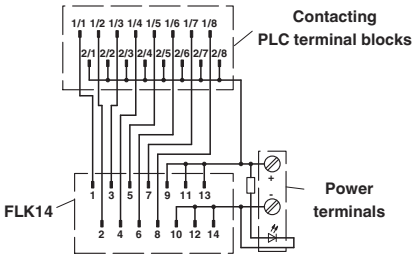

Connection scheme: PLC-V8/FLK14/IN

Schematic diagram

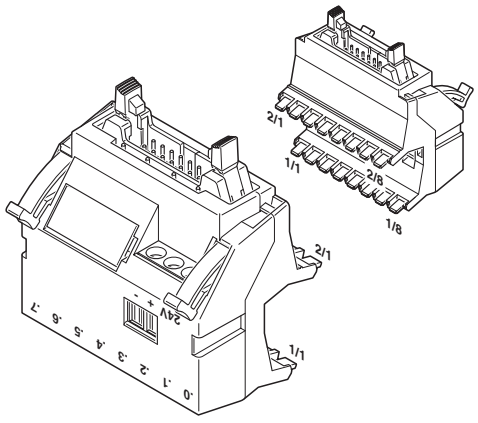

System connection - PLC-V8/FLK14/IN - 2296553

Dimensional drawing



Dimensional drawing



Classifications

eCl@ss

eCl@ss 10.0.1	27141152
eCl@ss 11.0	27141152
eCl@ss 4.0	27250300
eCl@ss 4.1	27250300
eCl@ss 5.0	27242700
eCl@ss 5.1	27242700
eCl@ss 6.0	27242200
eCl@ss 7.0	27141152
eCl@ss 8.0	27141152
eCl@ss 9.0	27141152

ETIM

ETIM 5.0	EC002780
ETIM 6.0	EC002780
ETIM 7.0	EC002780

UNSPSC

UNSPSC 6.01	30211824
UNSPSC 7.0901	39121402

System connection - PLC-V8/FLK14/IN - 2296553

Classifications

UNSPSC

UNSPSC 11	39121402
UNSPSC 12.01	39121402
UNSPSC 13.2	39121432
UNSPSC 18.0	39121432
UNSPSC 19.0	39121432
UNSPSC 20.0	39121432
UNSPSC 21.0	39121432

Approvals

Approvals

Approvals

PRS / UL Listed / UL Recognized / cUL Recognized / cUL Listed / DNV GL / cULus Recognized / cULus Listed

Ex Approvals

UL Listed / cUL Listed / cULus Listed

Approval details

PRS	http://www.prs.pl/	TE/2109/880590/16

UL Listed	http://database.ul.com/cgi-bin/XYV/template/LISEXT/1FRAME/index.htm	FILE E 172140

UL Recognized	http://database.ul.com/cgi-bin/XYV/template/LISEXT/1FRAME/index.htm	FILE E 238705

Nominal voltage UN	24 V
Nominal current IN	1 A

System connection - PLC-V8/FLK14/IN - 2296553

Approvals

cUL Recognized		http://database.ul.com/cgi-bin/XYV/template/LISEXT/1FRAME/index.htm	FILE E 238705

Nominal voltage UN	24 V
Nominal current IN	1 A

cUL Listed		http://database.ul.com/cgi-bin/XYV/template/LISEXT/1FRAME/index.htm	FILE E 172140

DNV GL		https://approvalfinder.dnvgl.com/	TAE0000196-03

cULus Recognized	

cULus Listed	

Accessories

Accessories

Front adapter

Front adapters - CABLE-50/4FLK14/ 2,0M/YUC - 2314655



Cast Yokogawa front adapter with attached round cable and an injection-molded 50-pos. socket strip for the connection of 4 x 8 channels on the field side. Cable length: 2.0 m

System connection - PLC-V8/FLK14/IN - 2296553

Accessories

Front adapters - CABLE-50/4FLK14/ 3,0M/YUC - 2314668



Cast Yokogawa front adapter with attached round cable and an injection-molded 50-pos. socket strip for the connection of 4 x 8 channels on the field side. Cable length: 3.0 m

---

Front adapters - CABLE-50/4FLK14/ 4,0M/YUC - 2314671



Cast Yokogawa front adapter with attached round cable and an injection-molded 50-pos. socket strip for the connection of 4 x 8 channels on the field side. Cable length: 4.0 m

---

Front adapters - CABLE-50/4FLK14/ 6,0M/YUC - 2318978



Cast Yokogawa front adapter with attached round cable and an injection-molded 50-pos. socket strip for the connection of 4 x 8 channels on the field side. Cable length: 6.0 m

---

Front adapters - CABLE-50/4FLK14/10,0M/YUC - 2314684



Cast Yokogawa front adapter with attached round cable and an injection-molded 50-pos. socket strip for the connection of 4 x 8 channels on the field side. Cable length: 10.0 m

---

Front adapters - CABLE-50/4FLK14/15,0M/YUC - 2322773



Cast Yokogawa front adapter with attached round cable and an injection-molded 50-pos. socket strip for the connection of 4 x 8 channels on the field side. Cable length: 15.0 m

---

System connection - PLC-V8/FLK14/IN - 2296553

Accessories

Front adapters - CABLE-50/4FLK14/20,0M/YUC - 2314778



Cast Yokogawa front adapter with attached round cable and an injection-molded 50-pos. socket strip for the connection of 4 x 8 channels on the field side. Cable length: 20.0 m

Front adapters - CABLE-50/4FLK14/28,0M/YUC - 2901386



Cast Yokogawa front adapter with attached round cable and an injection-molded 50-pos. socket strip for the connection of 4 x 8 channels on the field side. Cable length: 28.0 m

Front adapters - CABLE-50/4FLK14/50,0M/YUC - 2314765



Cast Yokogawa front adapter with attached round cable and an injection-molded 50-pos. socket strip for the connection of 4 x 8 channels on the field side. Cable length: 50.0 m

System cable

Cable - FLKMIL-50/4FLK14/EZ-DR/ 100/CS - 2306951



Assembled shielded round cable; controller: Yokogawa CS3000 CentumVP (ADV561, ADV161); connection 1: IDC/FLK socket strip (1x 50-position); connection 2: IDC/FLK socket strip (4x 14-position); cable length: 1 m

Cable - FLKMIL-50/4FLK14/EZ-DR/ 200/CS - 2306304



Assembled shielded round cable; controller: Yokogawa CS3000 CentumVP (ADV561, ADV161); connection 1: IDC/FLK socket strip (1x 50-position); connection 2: IDC/FLK socket strip (4x 14-position); cable length: 2 m

System connection - PLC-V8/FLK14/IN - 2296553

Accessories

Cable - FLKMIL-50/4FLK14/EZ-DR/ 300/CS - 2306964



Assembled shielded round cable; controller: Yokogawa CS3000 CentumVP (ADV561, ADV161); connection 1: IDC/FLK socket strip (1x 50-position); connection 2: IDC/FLK socket strip (4x 14-position); cable length: 3 m

Cable - FLKMIL-50/4FLK14/EZ-DR/ 500/CS - 2306977



Assembled shielded round cable; controller: Yokogawa CS3000 CentumVP (ADV561, ADV161); connection 1: IDC/FLK socket strip (1x 50-position); connection 2: IDC/FLK socket strip (4x 14-position); cable length: 5 m

Cable - FLKMIL-50/4FLK14/EZ-DR/ 600/CS - 2318949



Assembled shielded round cable; controller: Yokogawa CS3000 CentumVP (ADV561, ADV161); connection 1: IDC/FLK socket strip (1x 50-position); connection 2: IDC/FLK socket strip (4x 14-position); cable length: 6 m

Cable - FLKMIL-50/4FLK14/EZ-DR/1000/CS - 2306980



Assembled shielded round cable; controller: Yokogawa CS3000 CentumVP (ADV561, ADV161); connection 1: IDC/FLK socket strip (1x 50-position); connection 2: IDC/FLK socket strip (4x 14-position); cable length: 10 m

Cable - FLKMIL-50/4FLK14/EZ-DR/1500/CS - 2301503



Assembled shielded round cable; controller: Yokogawa CS3000 CentumVP (ADV561, ADV161); connection 1: IDC/FLK socket strip (1x 50-position); connection 2: IDC/FLK socket strip (4x 14-position); cable length: 15 m

System connection - PLC-V8/FLK14/IN - 2296553

Accessories

Cable - FLKMIL-50/4FLK14/EZ-DR/2000/CS - 2301914



Assembled shielded round cable; controller: Yokogawa CS3000 CentumVP (ADV561, ADV161); connection 1: IDC/FLK socket strip (1x 50-position); connection 2: IDC/FLK socket strip (4x 14-position); cable length: 20 m

Cable - FLKMIL-50/4FLK14/EZ-DR/3000/CS - 2900159



Assembled shielded round cable; controller: Yokogawa CS3000 CentumVP (ADV561, ADV161); connection 1: IDC/FLK socket strip (1x 50-position); connection 2: IDC/FLK socket strip (4x 14-position); cable length: 30 m

Necessary add-on products

Relay Module - PLC-RPT- 12DC/21AU - 2900317



PLC-INTERFACE, consisting of PLC-BPT.../21 basic terminal block with push-in connection and plug-in miniature relay with multi-layer gold contact, for mounting on DIN rail NS 35/7,5, 1 PDT, input voltage 12 V DC

Relay Module - PLC-RSC- 12DC/21AU - 2966919



PLC-INTERFACE, consisting of PLC-BSC.../21 basic terminal block with screw connection and plug-in miniature relay with multi-layer gold contact, for mounting on DIN rail NS 35/7,5, 1 PDT, input voltage 12 V DC

Relay Module - PLC-RPT- 24DC/21AU - 2900306



PLC-INTERFACE, consisting of PLC-BPT.../21 basic terminal block with push-in connection and plug-in miniature relay with multi-layer gold contact, for mounting on DIN rail NS 35/7,5, 1 PDT, input voltage 24 V DC

System connection - PLC-V8/FLK14/IN - 2296553

Accessories

Relay Module - PLC-RSC- 24DC/21AU - 2966265



PLC-INTERFACE, consisting of PLC-BSC.../21 basic terminal block with screw connection and plug-in miniature relay with multi-layer gold contact, for mounting on DIN rail NS 35/7,5, 1 PDT, input voltage 24 V DC

Relay Module - PLC-RPT- 24UC/21AU - 2900307



PLC-INTERFACE, consisting of PLC-BPT.../21 basic terminal block with push-in connection and plug-in miniature relay with multi-layer gold contact, for mounting on DIN rail NS 35/7,5, 1 PDT, input voltage 24 V AC/DC

Relay Module - PLC-RSC- 24UC/21AU - 2966278



PLC-INTERFACE, consisting of PLC-BSC.../21 basic terminal block with screw connection and plug-in miniature relay with multi-layer gold contact, for mounting on DIN rail NS 35/7,5, 1 PDT, input voltage 24 V AC/DC

Relay Module - PLC-RPT- 48DC/21AU - 2900308



PLC-INTERFACE, consisting of PLC-BPT.../21 basic terminal block with push-in connection and plug-in miniature relay with multi-layer gold contact, for mounting on DIN rail NS 35/7,5, 1 PDT, input voltage 48 V DC

Relay Module - PLC-RSC- 48DC/21AU - 2966126



PLC-INTERFACE, consisting of PLC-BSC.../21 basic terminal block with screw connection and plug-in miniature relay with multi-layer gold contact, for mounting on DIN rail NS 35/7,5, 1 PDT, input voltage 48 V DC

System connection - PLC-V8/FLK14/IN - 2296553

Accessories

Relay Module - PLC-RPT- 60DC/21AU - 2900309



PLC-INTERFACE, consisting of PLC-BPT.../21 basic terminal block with push-in connection and plug-in miniature relay with multi-layer gold contact, for mounting on DIN rail NS 35/7,5, 1 PDT, input voltage 60 V DC

Relay Module - PLC-RSC- 60DC/21AU - 2966142



PLC-INTERFACE, consisting of PLC-BSC.../21 basic terminal block with screw connection and plug-in miniature relay with multi-layer gold contact, for mounting on DIN rail NS 35/7,5, 1 PDT, input voltage 60 V DC

Relay Module - PLC-RPT-120UC/21AU - 2900310



PLC-INTERFACE, consisting of PLC-BPT.../21 basic terminal block with push-in connection and plug-in miniature relay with multi-layer gold contact, for mounting on DIN rail NS 35/7,5, 1 PDT, input voltage 120 V AC/110 V DC

Relay Module - PLC-RSC-120UC/21AU - 2966281



PLC-INTERFACE, consisting of PLC-BSC.../21 basic terminal block with screw connection and plug-in miniature relay with multi-layer gold contact, for mounting on DIN rail NS 35/7,5, 1 PDT, input voltage 120 V AC/110 V DC

Relay Module - PLC-RPT-230UC/21AU - 2900311



PLC-INTERFACE, consisting of PLC-BPT.../21 basic terminal block with push-in connection and plug-in miniature relay with multi-layer gold contact, for mounting on DIN rail NS 35/7,5, 1 PDT, input voltage 230 V AC/220 V DC

System connection - PLC-V8/FLK14/IN - 2296553

Accessories

Relay Module - PLC-RSC-230UC/21AU - 2966294



PLC-INTERFACE, consisting of PLC-BSC.../21 basic terminal block with screw connection and plug-in miniature relay with multi-layer gold contact, for mounting on DIN rail NS 35/7,5, 1 PDT, input voltage 230 V AC/220 V DC

Relay base - PLC-BPT-120UC/21/SO46 - 2900453



6.2 mm PLC basic terminal block with interference current and interference voltage protection on the control side, with push-in connection, without relay or solid-state relay, for mounting on DIN rail NS 35/7,5, with integrated RCZ filter, 1 PDT, input voltage 120 V AC

Relay base - PLC-BSC-120UC/21/SO46 - 2980319



6.2 mm PLC basic terminal block with interference current and interference voltage protection on the control side, with screw connection, without relay or solid-state relay, for mounting on DIN rail NS 35/7,5, with integrated RCZ filter, 1 PDT, input voltage 120 V AC

Relay base - PLC-BPT-230UC/21/SO46 - 2900455



6.2 mm PLC basic terminal block with interference current and interference voltage protection on the control side, with push-in connection, without relay or solid-state relay, for mounting on DIN rail NS 35/7,5, with integrated RCZ filter, 1 PDT, input voltage 230 V AC

Relay base - PLC-BSC-230UC/21/SO46 - 2980335



6.2 mm PLC basic terminal block with interference current and interference voltage protection on the control side, with screw connection, without relay or solid-state relay, for mounting on DIN rail NS 35/7,5, with integrated RCZ filter, 1 PDT, input voltage 230 V AC

System connection - PLC-V8/FLK14/IN - 2296553

Accessories

Solid-state relay module - PLC-OPT- 24DC/ 48DC/100 - 2900352



PLC-INTERFACE, consisting of PLC-BPT.../21 basic terminal block with push-in connection and plug-in miniature solid-state relay, for mounting on DIN rail NS 35/7,5, 1 N/O contact, input: 24 V DC, output: 3 - 48 V DC/100 mA

Solid-state relay module - PLC-OSC- 24DC/ 48DC/100 - 2966728



PLC-INTERFACE, consisting of PLC-BSC.../21 basic terminal block with screw connection and plug-in miniature solid-state relay, for mounting on DIN rail NS 35/7,5, 1 N/O contact, input: 24 V DC, output: 3 - 48 V DC/100 mA

Solid-state relay module - PLC-OPT- 48DC/ 48DC/100 - 2900353



PLC-INTERFACE, consisting of PLC-BPT.../21 basic terminal block with push-in connection and plug-in miniature solid-state relay, for mounting on DIN rail NS 35/7,5, 1 N/O contact, input: 48 V DC, output: 3 - 48 V DC/100 mA

Solid-state relay module - PLC-OSC- 48DC/ 48DC/100 - 2966993



PLC-INTERFACE, consisting of PLC-BSC.../21 basic terminal block with screw connection and plug-in miniature solid-state relay, for mounting on DIN rail NS 35/7,5, 1 N/O contact, input: 48 V DC, output: 3 - 48 V DC/100 mA

Solid-state relay module - PLC-OPT- 60DC/ 48DC/100 - 2900354



PLC-INTERFACE, consisting of PLC-BPT.../21 basic terminal block with push-in connection and plug-in miniature solid-state relay, for mounting on DIN rail NS 35/7,5, 1 N/O contact, input: 60 V DC, output: 3 - 48 V DC/100 mA

System connection - PLC-V8/FLK14/IN - 2296553

Accessories

Solid-state relay module - PLC-OSC- 60DC/ 48DC/100 - 2967455



PLC-INTERFACE, consisting of PLC-BSC.../21 basic terminal block with screw connection and plug-in miniature solid-state relay, for mounting on DIN rail NS 35/7,5, 1 N/O contact, input: 60 V DC, output: 3 - 48 V DC/100 mA

Solid-state relay module - PLC-OPT-120UC/ 48DC/100 - 2900355



PLC-INTERFACE, consisting of PLC-BPT.../21 basic terminal block with push-in connection and plug-in miniature solid-state relay, for mounting on DIN rail NS 35/7,5, 1 N/O contact, input: 120 V AC/110 V DC, output: 3 - 48 V DC/100 mA

Solid-state relay module - PLC-OSC-120UC/ 48DC/100 - 2966744



PLC-INTERFACE, consisting of PLC-BSC.../21 basic terminal block with screw connection and plug-in miniature solid-state relay, for mounting on DIN rail NS 35/7,5, 1 N/O contact, input: 120 V AC/110 V DC, output: 3 - 48 V DC/100 mA

Solid-state relay module - PLC-OPT-230UC/ 48DC/100 - 2900356



PLC-INTERFACE, consisting of PLC-BPT.../21 basic terminal block with push-in connection and plug-in miniature solid-state relay, for mounting on DIN rail NS 35/7,5, 1 N/O contact, input: 230 V AC/220 V DC, output: 3 - 48 V DC/100 mA

Solid-state relay module - PLC-OSC-230UC/ 48DC/100 - 2966757



PLC-INTERFACE, consisting of PLC-BSC.../21 basic terminal block with screw connection and plug-in miniature solid-state relay, for mounting on DIN rail NS 35/7,5, 1 N/O contact, input: 230 V AC/220 V DC, output: 3 - 48 V DC/100 mA

System connection - PLC-V8/FLK14/IN - 2296553

Accessories

Solid-state relay module - PLC-PT-EIK 1-SVN 24P/P - 2900397



PLC-INTERFACE for NAMUR applications, consisting of PLC-BPT.../21 basic terminal block with push-in connection and integrated circuit, for mounting on DIN rail NS 35/7,5, positive switching, 1 N/O contact, input voltage 24 V DC

Solid-state relay module - PLC-SC-EIK 1-SVN 24P/P - 2982663



PLC-INTERFACE for NAMUR applications, consisting of PLC-BSC.../21 basic terminal block with screw connection and integrated circuit, for mounting on DIN rail NS 35/7,5, positive switching, 1 N/O contact, input voltage 24 V DC

Relay base - PLC-BPT-120UC/21/SO46 - 2900453



6.2 mm PLC basic terminal block with interference current and interference voltage protection on the control side, with push-in connection, without relay or solid-state relay, for mounting on DIN rail NS 35/7,5, with integrated RCZ filter, 1 PDT, input voltage 120 V AC

Relay base - PLC-BSC-120UC/21/SO46 - 2980319



6.2 mm PLC basic terminal block with interference current and interference voltage protection on the control side, with screw connection, without relay or solid-state relay, for mounting on DIN rail NS 35/7,5, with integrated RCZ filter, 1 PDT, input voltage 120 V AC

Relay base - PLC-BPT-230UC/21/SO46 - 2900455



6.2 mm PLC basic terminal block with interference current and interference voltage protection on the control side, with push-in connection, without relay or solid-state relay, for mounting on DIN rail NS 35/7,5, with integrated RCZ filter, 1 PDT, input voltage 230 V AC

System connection - PLC-V8/FLK14/IN - 2296553

Accessories

Relay base - PLC-BSC-230UC/21/SO46 - 2980335



6.2 mm PLC basic terminal block with interference current and interference voltage protection on the control side, with screw connection, without relay or solid-state relay, for mounting on DIN rail NS 35/7,5, with integrated RCZ filter, 1 PDT, input voltage 230 V AC

Feed-through terminal block - PLC-VT - 2296870



VARIOFACE feed-through terminal block (2-conductor screw connection), for PLC-INTERFACE universal series

---

Feed-through terminal block - PLC-VT/LA - 2296854



VARIOFACE feed-through terminal block (2-conductor screw connection), for PLC-INTERFACE universal series, with 24 V DC LED display

---

Relay Module - PLC-RPT- 24DC/ 1AU/SEN - 2900313



PLC-INTERFACE for input functions, consisting of PLC-BPT.../SEN basic terminal block with push-in connection and plug-in miniature relay with multi-layer gold contact, for mounting on DIN rail NS 35/7,5, 1 N/O contact, input voltage 24 V DC

Relay Module - PLC-RSC- 24DC/ 1AU/SEN - 2966317



PLC-INTERFACE for input functions, consisting of PLC-BSC.../SEN basic terminal block with screw connection and plug-in miniature relay with multi-layer gold contact, for mounting on DIN rail NS 35/7,5, 1 N/O contact, input voltage 24 V DC

System connection - PLC-V8/FLK14/IN - 2296553

Accessories

Relay Module - PLC-RPT-120UC/ 1AU/SEN - 2900314



PLC-INTERFACE for input functions, consisting of PLC-BPT.../SEN basic terminal block with push-in connection and plug-in miniature relay with multi-layer gold contact, for mounting on DIN rail NS 35/7,5, 1 N/O contact, input voltage 120 V AC/110 V DC

Relay Module - PLC-RSC-120UC/ 1AU/SEN - 2966320



PLC-INTERFACE for input functions, consisting of PLC-BSC.../SEN basic terminal block with screw connection and plug-in miniature relay with multi-layer gold contact, for mounting on DIN rail NS 35/7,5, 1 N/O contact, input voltage 120 V AC/110 V DC

Relay Module - PLC-RPT-230UC/ 1AU/SEN - 2900315



PLC-INTERFACE for input functions, consisting of PLC-BPT.../SEN basic terminal block with push-in connection and plug-in miniature relay with multi-layer gold contact, for mounting on DIN rail NS 35/7,5, 1 N/O contact, input voltage 230 V AC/220 V DC

Relay Module - PLC-RSC-230UC/ 1AU/SEN - 2966333



PLC-INTERFACE for input functions, consisting of PLC-BSC.../SEN basic terminal block with screw connection and plug-in miniature relay with multi-layer gold contact, for mounting on DIN rail NS 35/7,5, 1 N/O contact, input voltage 230 V AC/220 V DC

Relay base - PLC-BPT-120UC/ 1/SEN/SO46 - 2900456



6.2 mm PLC basic terminal block with interference current and interference voltage protection on the control side, with push-in connection, without relay or solid-state relay, with sensor supply voltage distribution (BB), 1 N/O contact, input voltage 120 V AC

System connection - PLC-V8/FLK14/IN - 2296553

Accessories

Relay base - PLC-BSC-120UC/ 1/SEN/SO46 - 2980322



6.2 mm PLC basic terminal block with interference current and interference voltage protection on the control side, with screw connection, without relay or solid-state relay, with sensor supply voltage distribution (BB), 1 N/O contact, input voltage 120 V AC

Relay base - PLC-BPT-230UC/ 1/SEN/SO46 - 2900457



6.2 mm PLC basic terminal block with interference current and interference voltage protection on the control side, with push-in connection, without relay or solid-state relay, with sensor supply voltage distribution (BB), 1 N/O contact, input voltage 230 V AC

Relay base - PLC-BSC-230UC/ 1/SEN/SO46 - 2980348



6.2 mm PLC basic terminal block with interference current and interference voltage protection on the control side, with screw connection, without relay or solid-state relay, with sensor supply voltage distribution (BB), 1 N/O contact, input voltage 230 V AC

Solid-state relay module - PLC-OPT- 24DC/ 48DC/100/SEN - 2900358



PLC-INTERFACE for input functions, consisting of PLC-BPT.../SEN basic terminal block with push-in connection and plug-in miniature solid-state relay, for mounting on DIN rail NS 35/7,5, 1 N/O contact, input: 24 V DC, output: 3 - 48 V DC/100 mA

Solid-state relay module - PLC-OSC- 24DC/ 48DC/100/SEN - 2966773



PLC-INTERFACE for input functions, consisting of PLC-BSC.../SEN basic terminal block with screw connection and plug-in miniature solid-state relay, for mounting on DIN rail NS 35/7,5, 1 N/O contact, input: 24 V DC, output: 3 - 48 V DC/100 mA

System connection - PLC-V8/FLK14/IN - 2296553

Accessories

Solid-state relay module - PLC-OPT-120UC/ 48DC/100/SEN - 2900359



PLC-INTERFACE for input functions, consisting of PLC-BPT.../SEN basic terminal block with push-in connection and plug-in miniature solid-state relay, for mounting on DIN rail NS 35/7,5, 1 N/O contact, input: 120 V AC/110 V DC, output: 3 - 48 V DC/100 mA

Solid-state relay module - PLC-OSC-120UC/ 48DC/100/SEN - 2966799



PLC-INTERFACE for input functions, consisting of PLC-BSC.../SEN basic terminal block with screw connection and plug-in miniature solid-state relay, for mounting on DIN rail NS 35/7,5, 1 N/O contact, input: 120 V AC/110 V DC, output: 3 - 48 V DC/100 mA

Solid-state relay module - PLC-OPT-230UC/ 48DC/100/SEN - 2900361



PLC-INTERFACE for input functions, consisting of PLC-BPT.../SEN basic terminal block with push-in connection and plug-in miniature solid-state relay, for mounting on DIN rail NS 35/7,5, 1 N/O contact, input: 230 V AC/220 V DC, output: 3 - 48 V DC/100 mA

Solid-state relay module - PLC-OSC-230UC/ 48DC/100/SEN - 2966809



PLC-INTERFACE for input functions, consisting of PLC-BSC.../SEN basic terminal block with screw connection and plug-in miniature solid-state relay, for mounting on DIN rail NS 35/7,5, 1 N/O contact, input: 230 V AC/220 V DC, output: 3 - 48 V DC/100 mA

Relay base - PLC-BPT-120UC/ 1/SEN/SO46 - 2900456



6.2 mm PLC basic terminal block with interference current and interference voltage protection on the control side, with push-in connection, without relay or solid-state relay, with sensor supply voltage distribution (BB), 1 N/O contact, input voltage 120 V AC

System connection - PLC-V8/FLK14/IN - 2296553

Accessories

Relay base - PLC-BSC-120UC/ 1/SEN/SO46 - 2980322



6.2 mm PLC basic terminal block with interference current and interference voltage protection on the control side, with screw connection, without relay or solid-state relay, with sensor supply voltage distribution (BB), 1 N/O contact, input voltage 120 V AC

Relay base - PLC-BPT-230UC/ 1/SEN/SO46 - 2900457



6.2 mm PLC basic terminal block with interference current and interference voltage protection on the control side, with push-in connection, without relay or solid-state relay, with sensor supply voltage distribution (BB), 1 N/O contact, input voltage 230 V AC

Relay base - PLC-BSC-230UC/ 1/SEN/SO46 - 2980348



6.2 mm PLC basic terminal block with interference current and interference voltage protection on the control side, with screw connection, without relay or solid-state relay, with sensor supply voltage distribution (BB), 1 N/O contact, input voltage 230 V AC

Phoenix Contact 2021 © - all rights reserved
http://www.phoenixcontact.com