Hybrid motor starter - ELR H5-IES-SC- 24DC/500AC-2 - 2900414

Please be informed that the data shown in this PDF Document is generated from our Online Catalog. Please find the complete data in the user's documentation. Our General Terms of Use for Downloads are valid (http://phoenixcontact.com/download)



Hybrid motor starter for reversing 3~ AC motors up to 500 V AC and 2.4 A output current, with 24 V DC control voltage, adjustable overload shutdown and emergency stop function to SIL 3 / PL e and screw connection

Your advantages

- 22.5 mm wide
- Safety level according to IEC 61508-1: SIL 3, ISO 13849: PL e
- Reduction in wiring
- Long service life
- Space saving
- 3-phase loop bridges
- Adjustable current for bimetal function
- Low-wear switching

Key Commercial Data

Packing unit	1 pc
GTIN	4 046356 504058
GTIN	4046356504058
Weight per Piece (excluding packing)	300.000 g
Custom tariff number	85371098
Country of origin	Germany

Technical data

Dimensions

Width	22.5 mm
Height	107 mm

Hybrid motor starter - ELR H5-IES-SC- 24DC/500AC-2 - 2900414

Technical data

Dimensions

Depth	114 mm

Ambient conditions

Ambient temperature (operation)	-25 °C ... 70 °C (observe derating)
Ambient temperature (storage/transport)	-40 °C ... 80 °C
Maximum altitude	≤ 2000 m
Degree of protection	IP20

Device supply

Rated control circuit supply voltage U_S	24 V DC
Control supply voltage range	19.2 V DC ... 30 V DC
Rated control supply current I_S	40 mA
Type of protection	Surge protection
	Reverse polarity protection

Input data

Input name	Control input right/left
Rated actuating voltage U_C	24 V DC
Triggering voltage range	19.2 V DC ... 30 V DC
Rated actuating current I_C	5 mA (Input type 1)
Switching threshold	9.6 V (“0” signal)
	19.2 V (“1” signal)
Switching level	< 5 V DC (For EMERGENCY STOP)
Typical turn-off time	< 30 ms
Type of protection	Reverse polarity protection

Output data load output

Output name	AC output
Rated operating voltage U_e	500 V AC
Operating voltage range	42 V AC ... 550 V AC
Rated operating current I_e	2.4 A (AC-51)
	2.4 A (AC-53a)
Mains frequency	50/60 Hz
Load current range	180 mA ... 2.4 A (see to derating)
Trigger characteristic in acc. with IEC 60947-4-2	Class 10A
Cooling time	20 min. (for auto reset)
Leakage current	0 mA
Type of protection	Surge protection

Output data reply output

Hybrid motor starter - ELR H5-IES-SC- 24DC/500AC-2 - 2900414

Technical data

Output data reply output

Output name	Acknowledge output
Note	Confirmation: floating change-over contact, signal contact
Contact type	1 PDT
Switching capacity according to IEC 60947-5-1	3 A (230 V, AC15)
	2 A (24 V, DC13)

General

Motor starter type	Reversing starter
Switching frequency	≤ 2 Hz (Load-dependent)
Mounting position	vertical (horizontal DIN rail, motor output below)
Mounting type	DIN rail mounting
Assembly instructions	alignable, for spacing see derating
Operating mode	100% operating factor
Maximum power dissipation	3.3 W
Minimum power dissipation	1.1 W
Operating voltage display	Green LED
Status display	Yellow LED
Indication	Red LED

Connection data

Connection name	Control circuits
Connection method	Screw connection
Stripping length	8 mm
Screw thread	M3
Conductor cross section solid	0.2 mm² ... 2.5 mm²
Conductor cross section flexible	0.2 mm² ... 2.5 mm²
Conductor cross section AWG	24 ... 14
Torque	0.5 Nm ... 0.6 Nm
	5 lb_f-in. ... 7 lb_f-in.

Connection data 2

Connection name	Load circuit
Connection method	Screw connection
Stripping length	8 mm
Screw thread	M3
Conductor cross section solid	0.2 mm² ... 2.5 mm²
Conductor cross section flexible	0.2 mm² ... 2.5 mm²
Conductor cross section AWG	24 ... 14
Torque	0.5 Nm ... 0.6 Nm

Hybrid motor starter - ELR H5-IES-SC- 24DC/500AC-2 - 2900414

Technical data

Connection data 2

	5 lb_f-in. ... 7 lb_f-in.

Insulation characteristics

Rated insulation voltage	500 V
Rated surge voltage	6 kV
Overvoltage category	III
Degree of pollution	2
Designation	Insulation characteristics between the control input and control supply voltage, and auxiliary circuit to the main circuit
Insulation	Safe isolation (IEC 60947-1/EN 50178) at operating voltage ≤ 300 V AC
	Basic isolation (IEC 60947-1) at operating voltage 300 ... 500 V AC
	Safe isolation (EN 50178) at operating voltage 300 ... 500 V AC
Designation	Isolation characteristics between the control input and control supply voltage to auxiliary circuit
Insulation	Safe isolation (IEC 60947-1) in the auxiliary circuit ≤ 300 V AC
	Safe isolation (EN 50178) in the auxiliary circuit ≤ 300 V AC

Standards and Regulations

Designation	Standards/regulations
Standards/regulations	IEC 60947-1
	IEC 60947-4-2
	IEC 61508
	ISO 13849

Conformance/approvals

Designation	ATEX
Identification	# II (2) G [Ex e] [Ex d] [Ex px]
	# II (2) D [Ex t] [Ex p]
Certificate	PTB 07 ATEX 3145
Designation	UL approval
Certificate	NLDX.E228652
Designation	Safety Integrity Level (SIL, IEC 61508)
Identification	≤ 3
Additional text	Safe shutdown
Designation	Safety Integrity Level (SIL, IEC 61508)
Identification	2
Additional text	Motor protection
Designation	Performance Level (ISO 13849)
Identification	≤ e

Hybrid motor starter - ELR H5-IES-SC- 24DC/500AC-2 - 2900414

Technical data

Conformance/approvals

Additional text	Safe shutdown
Designation	Category (ISO 13849)
Identification	≤ 3
Additional text	Safe shutdown

UL data

SCCR	100 kA (500 V AC (fuse: 30 A class CC/30 A class J (high fault)))
	5 kA (500 V AC (fuse: 20 A RK5 (standard fault)))
FLA	2.4 A (500 V AC)
Group installation	20 A (class RK5, SCCR 5kA, #24 - 14 AWG max. solid and stranded)
	30 A (class CC or J, SCCR 100kA, #24 - 14 AWG max, solid and stranded)
Category code	NLDX

Environmental Product Compliance

REACh SVHC	Lead 7439-92-1
China RoHS	Environmentally Friendly Use Period = 50 years
	For details about hazardous substances go to tab “Downloads”, Category “Manufacturer's declaration”

Drawings

Hybrid motor starter - ELR H5-IES-SC- 24DC/500AC-2 - 2900414

Circuit diagram

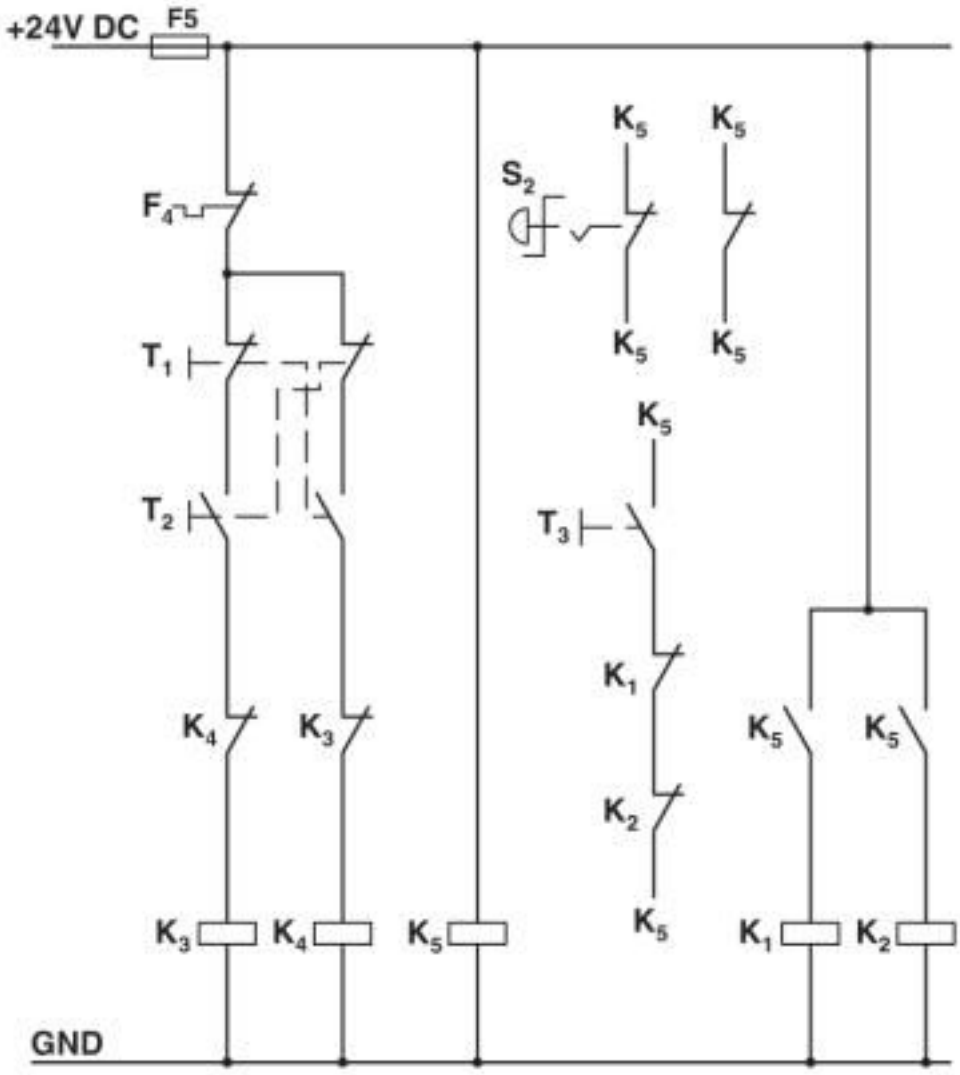

Conventional structure
Control current path reversing contactor according to category 3

K1 + K2 = Emergency stop contactor
K3 = Left contactor
K4 = Right contactor
K5 = PSR SCP-24DC.../Safety relay
T1 = Right, T2 = Left, T3 = Reset
S2 = Emergency stop
F4 = Motor protection relay

Hybrid motor starter - ELR H5-IES-SC- 24DC/500AC-2 - 2900414

Circuit diagram

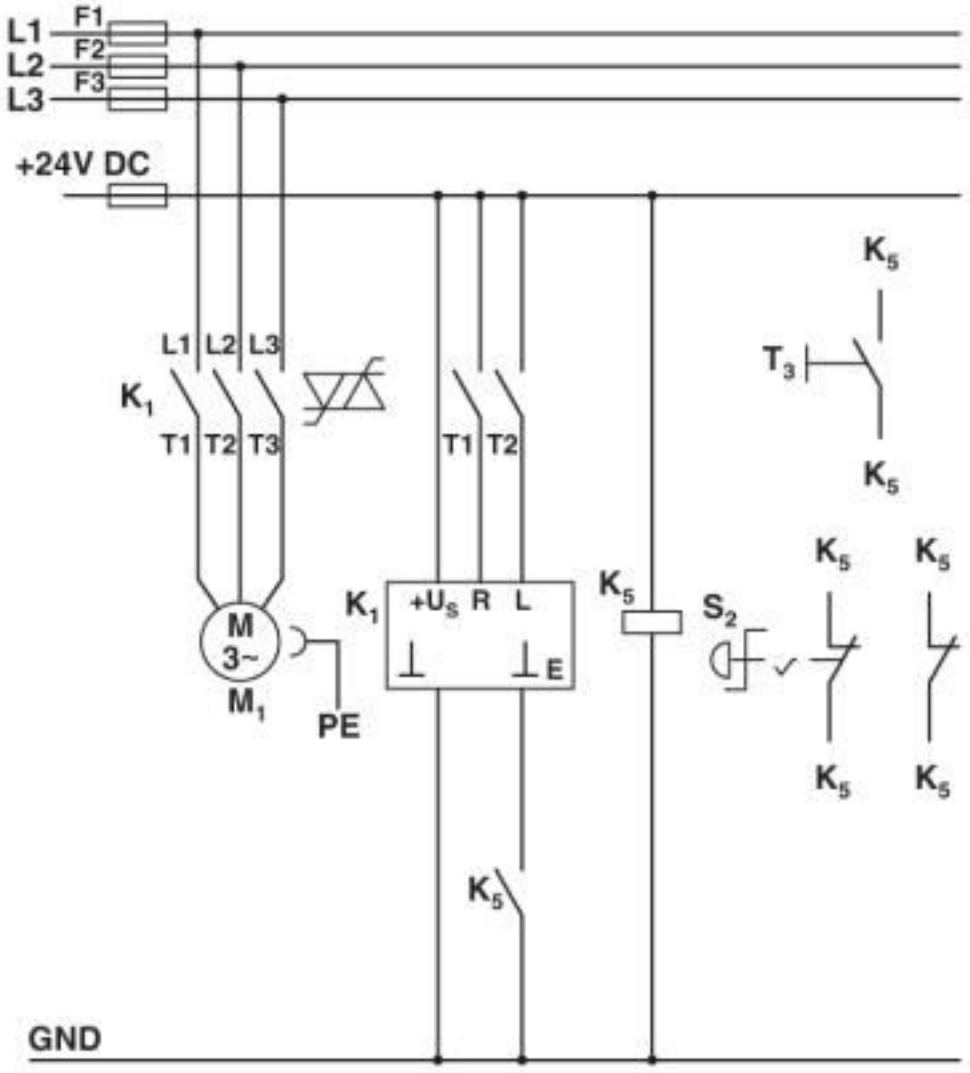

Structure with CONTACTRON

Main and control current path for '4 in 1' hybrid motor starter with reversing function according to category 3

K1 = '4 in 1' hybrid motor starter with reversing function

K5 = PSR SCP-24DC.../Safety relay

T1 = Right, T2 = Left, T3 = Reset

S2 = Emergency stop

Hybrid motor starter - ELR H5-IES-SC- 24DC/500AC-2 - 2900414

Circuit diagram

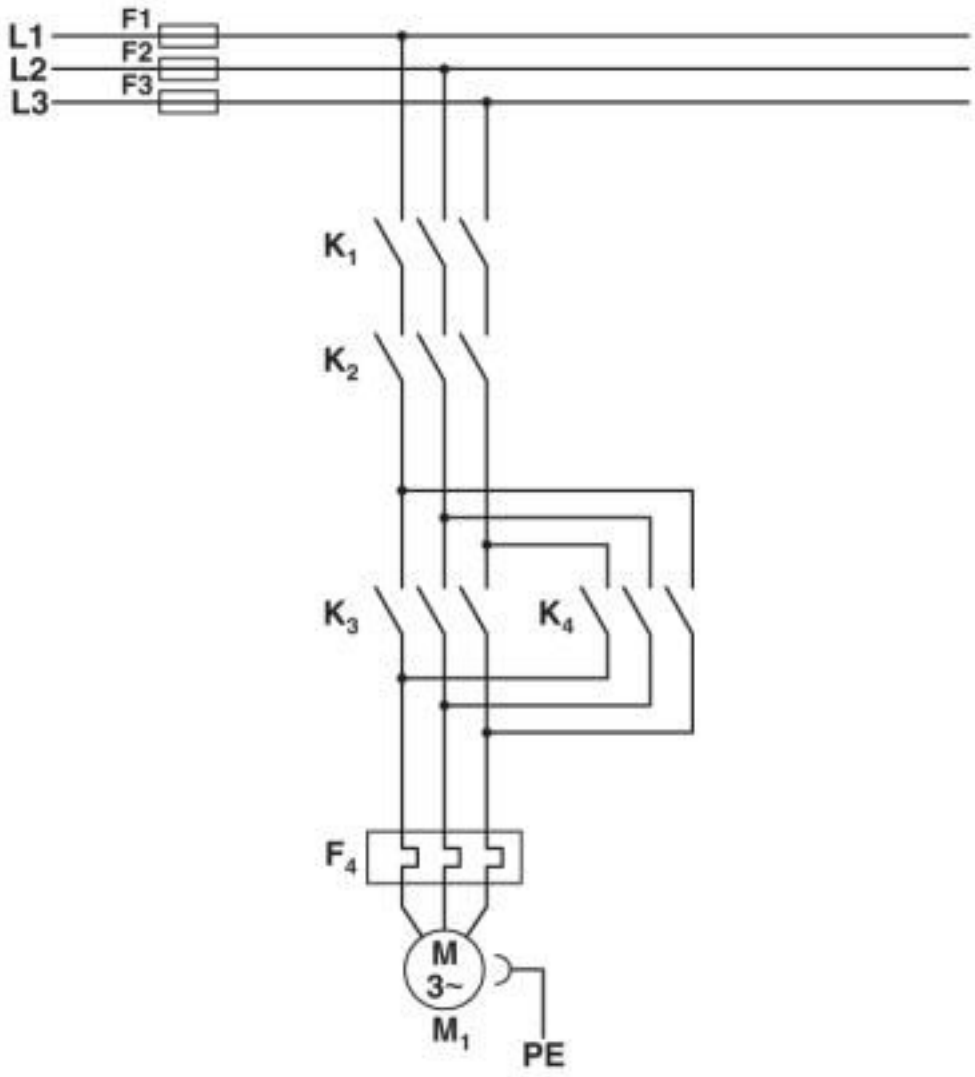

Conventional structure
Main current path for reversing contactor according to category 3

K1 + K2 = Emergency stop contactor
K3 = Left contactor
K4 = Right contactor
F4 = Motor protection relay

Hybrid motor starter - ELR H5-IES-SC- 24DC/500AC-2 - 2900414

Block diagram

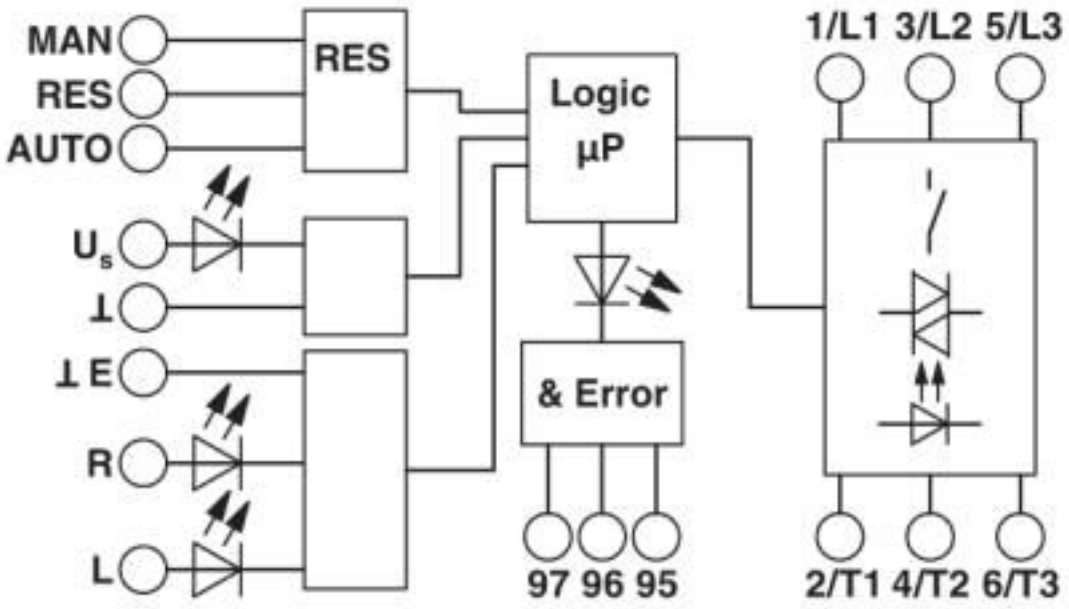

Diagram

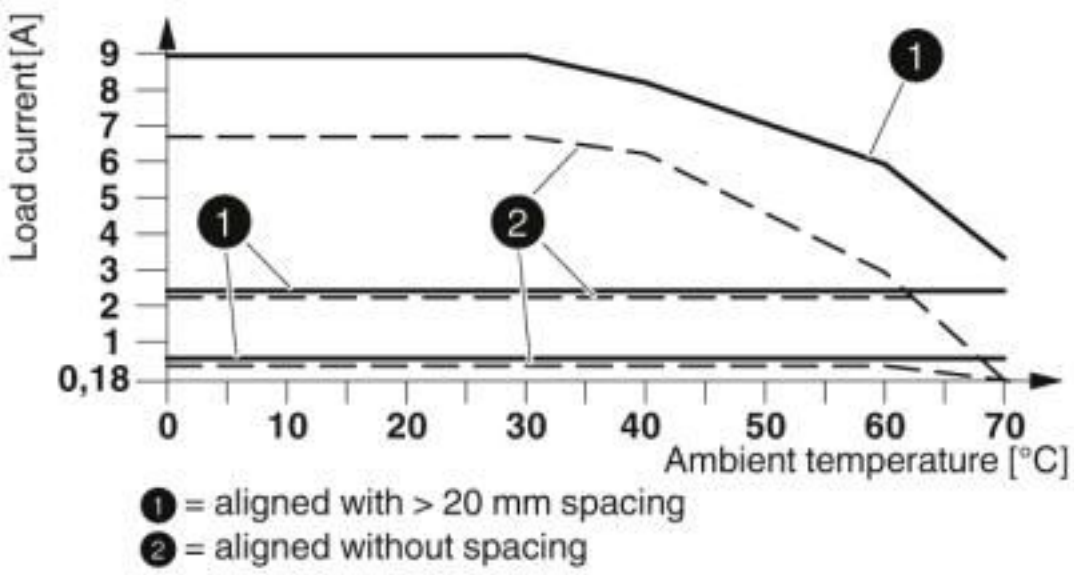

Derating diagram

Hybrid motor starter - ELR H5-IES-SC- 24DC/500AC-2 - 2900414

Classifications

eCl@ss

eCl@ss 10.0.1	27370905
eCl@ss 4.0	27021100
eCl@ss 4.1	27021100
eCl@ss 5.0	27024000
eCl@ss 5.1	27024000
eCl@ss 6.0	27024000
eCl@ss 7.0	27024002
eCl@ss 8.0	27024002
eCl@ss 9.0	27370905

ETIM

ETIM 2.0	EC001037
ETIM 3.0	EC001037
ETIM 4.0	EC001037
ETIM 5.0	EC001037
ETIM 6.0	EC001037
ETIM 7.0	EC001037

UNSPSC

UNSPSC 6.01	30211915
UNSPSC 7.0901	39121514
UNSPSC 11	39121514
UNSPSC 12.01	39121514
UNSPSC 13.2	25173902
UNSPSC 18.0	25173902
UNSPSC 19.0	25173902
UNSPSC 20.0	25173902
UNSPSC 21.0	25173902

Approvals

Approvals

Approvals

UL Listed / cUL Listed / UL Listed / IECEE CB Scheme / cUL Listed / CCC / EAC / DNV GL / GL

Hybrid motor starter - ELR H5-IES-SC- 24DC/500AC-2 - 2900414

Approvals

Ex Approvals

ATEX

Approval details

UL Listed		http://database.ul.com/cgi-bin/XYV/template/LISEXT/1FRAME/index.htm	FILE E 228652
cUL Listed		http://database.ul.com/cgi-bin/XYV/template/LISEXT/1FRAME/index.htm	FILE E 228652
UL Listed		http://database.ul.com/cgi-bin/XYV/template/LISEXT/1FRAME/index.htm	FILE E 323771
IECEE CB Scheme		http://www.iecee.org/	DE1-55728
cUL Listed		http://database.ul.com/cgi-bin/XYV/template/LISEXT/1FRAME/index.htm	FILE E 323771
CCC			2016010304871315
EAC			RU*C-DE.*08.B.00520*
DNV GL		https://approvalfinder.dnvgl.com/	TAA00002HK

Hybrid motor starter - ELR H5-IES-SC- 24DC/500AC-2 - 2900414

Approvals

GL	

Accessories

Accessories

Adapter

Adapter - EM-CPS-DA-22,5F/16A - 1002668



Device adapter with fuse holder for 16 A fuse (10x38/Class CC), CrossLink® interface and fixed DIN rail

Assembly adapter

Power distribution board - EM-CPS-225 - 1002634



Modular power distribution board with CrossLink® interface, 125 A, 3-pos., touch-proof and protection against polarity reversal, width: 225 mm

Power distribution board - EM-CPS-405 - 1002635



Modular power distribution board with CrossLink® interface, 125 A, 3-pos., touch-proof and protection against polarity reversal, width: 405 mm

Connection module - EM-CPS-TB3/63A - 1002633



Connection module with integrated spring-loaded terminals for cables from 1.5 to 16 mm², 3-pos., maximum 63 A

Hybrid motor starter - ELR H5-IES-SC- 24DC/500AC-2 - 2900414

Accessories

Bridge

Jumper - BRIDGE- 4-3M - 2901659



3-phase loop bridge for 4 CONTACTRON modules, with screw connection and 22.5 mm housing width, connecting cable: 3 m

Cover

Covering hood - BRIDGE COVER - 2906240



The BRIDGE COVER covering hood is used to cover unused plugs on the CONTACTRON bridge that may subsequently be used to extend the system. The hood can be used with the screw and Push-in version of the bridge.

Device marking

Plastic label - US-EMLP (15X5) - 0828790



Plastic label, Card, white, unlabeled, can be labeled with: BLUEMARK ID COLOR, BLUEMARK ID, THERMOMARK PRIME, THERMOMARK CARD 2.0, THERMOMARK CARD, mounting type: adhesive, lettering field size: 15 x 5 mm, Number of individual labels: 189

Plastic label - UC-EMLP (15X5) - 0819301



Plastic label, Sheet, white, unlabeled, can be labeled with: BLUEMARK ID COLOR, BLUEMARK ID, BLUEMARK CLED, PLOTMARK, CMS-P1-PLOTTER, mounting type: adhesive, lettering field size: 15 x 5 mm, Number of individual labels: 10

Loop bridge

Hybrid motor starter - ELR H5-IES-SC- 24DC/500AC-2 - 2900414

Accessories

Jumper - BRIDGE- 2 - 2900746



3-phase loop bridge for 2 CONTACTRON modules, with screw connection and 22.5 mm housing width, connecting cable: 0.3 m, with ferrules.

Jumper - BRIDGE- 3 - 2900747



3-phase loop bridge for 3 CONTACTRON modules, with screw connection and 22.5 mm housing width, connecting cable: 0.3 m, with ferrules.

Jumper - BRIDGE- 4 - 2900748



3-phase loop bridge for 4 CONTACTRON modules, with screw connection and 22.5 mm housing width, connecting cable: 0.3 m, with ferrules.

Jumper - BRIDGE- 5 - 2900749



3-phase loop bridge for 5 CONTACTRON modules, with screw connection and 22.5 mm housing width, connecting cable: 0.3 m, with ferrules.

Jumper - BRIDGE- 6 - 2900750



3-phase loop bridge for 6 CONTACTRON modules, with screw connection and 22.5 mm housing width, connecting cable: 0.3 m, with ferrules.

Hybrid motor starter - ELR H5-IES-SC- 24DC/500AC-2 - 2900414

Accessories

Jumper - BRIDGE- 7 - 2900751



3-phase loop bridge for 7 CONTACTRON modules, with screw connection and 22.5 mm housing width, connecting cable: 0.3 m, with ferrules.

Jumper - BRIDGE- 8 - 2900752



3-phase loop bridge for 8 CONTACTRON modules, with screw connection and 22.5 mm housing width, connecting cable: 0.3 m, with ferrules.

Jumper - BRIDGE- 9 - 2900753



3-phase loop bridge for 9 CONTACTRON modules, with screw connection and 22.5 mm housing width, connecting cable: 0.3 m, with ferrules.

Jumper - BRIDGE-10 - 2900754



3-phase loop bridge for 10 CONTACTRON modules, with screw connection and 22.5 mm housing width, connecting cable: 0.3 m, with ferrules.

Jumper - BRIDGE- 2-1M - 2901542



3-phase loop bridge for 2 CONTACTRON modules, with screw connection and 22.5 mm housing width, connecting cable: 1 m

Hybrid motor starter - ELR H5-IES-SC- 24DC/500AC-2 - 2900414

Accessories

Jumper - BRIDGE- 3-1M - 2901655



3-phase loop bridge for 3 CONTACTRON modules, with screw connection and 22.5 mm housing width, connecting cable: 1 m

Jumper - BRIDGE- 4-1M - 2901658



3-phase loop bridge for 4 CONTACTRON modules, with screw connection and 22.5 mm housing width, connecting cable: 1 m

Jumper - BRIDGE- 5-1M - 2901544



3-phase loop bridge for 5 CONTACTRON modules, with screw connection and 22.5 mm housing width, connecting cable: 1 m

Jumper - BRIDGE- 6-1M - 2901649



3-phase loop bridge for 6 CONTACTRON modules, with screw connection and 22.5 mm housing width, connecting cable: 1 m

Jumper - BRIDGE- 2-3M - 2901543



3-phase loop bridge for 2 CONTACTRON modules, with screw connection and 22.5 mm housing width, connecting cable: 3 m

Hybrid motor starter - ELR H5-IES-SC- 24DC/500AC-2 - 2900414

Accessories

Jumper - BRIDGE- 3-3M - 2901656



3-phase loop bridge for 3 CONTACTRON modules, with screw connection and 22.5 mm housing width, connecting cable: 3 m

Jumper - BRIDGE- 5-3M - 2901545



3-phase loop bridge for 5 CONTACTRON modules, with screw connection and 22.5 mm housing width, connecting cable: 3 m

Jumper - BRIDGE- 6-3M - 2901697



3-phase loop bridge for 6 CONTACTRON modules, with screw connection and 22.5 mm housing width, connecting cable: 3 m

Jumper - BRIDGE- 7-3M - 2901698



3-phase loop bridge for 7 CONTACTRON modules, with screw connection and 22.5 mm housing width, connecting cable: 3 m

Jumper - BRIDGE- 8-3M - 2901700



3-phase loop bridge for 8 CONTACTRON modules, with screw connection and 22.5 mm housing width, connecting cable: 3 m

Hybrid motor starter - ELR H5-IES-SC- 24DC/500AC-2 - 2900414

Accessories

Jumper - BRIDGE- 9-3M - 2901701



3-phase loop bridge for 9 CONTACTRON modules, with screw connection and 22.5 mm housing width, connecting cable: 3 m

Jumper - BRIDGE-10-3M - 2901702



3-phase loop bridge for 10 CONTACTRON modules, with screw connection and 22.5 mm housing width, connecting cable: 3 m

Jumper - BRIDGE- 2- 2M/0,3M - 2909897



3-phase loop bridge for 2 CONTACTRON modules, with screw connection and 22.5 mm housing width, cable length between the modules: 0.3 m, connecting cable: 2 m

Jumper - BRIDGE- 3- 2M/0,3M - 2909898



3-phase loop bridge for 3 CONTACTRON modules, with screw connection and 22.5 mm housing width, cable length between the modules: 0.3 m, connecting cable: 2 m

Jumper - BRIDGE- 4- 2M/0,3M - 2909899



3-phase loop bridge for 4 CONTACTRON modules, with screw connection and 22.5 mm housing width, cable length between the modules: 0.3 m, connecting cable: 2 m

Phoenix Contact 2020 © - all rights reserved
http://www.phoenixcontact.com