Power supply unit - QUINT-PS-3X400-500AC/24DC/40 - 2938646

Please be informed that the data shown in this PDF Document is generated from our Online Catalog. Please find the complete data in the user's documentation. Our General Terms of Use for Downloads are valid (http://phoenixcontact.com/download)



DIN rail power supply unit 24 V DC/40 A, primary switched-mode, 3-phase.

Product Description

QUINT POWER is the powerful 60 - 960 W DC power supply unit for universal use. With its wide-range input, single and three-phase versions, and international approval package, this solution is unrivalled. QUINT POWER provides reliable power supply: generously dimensioned capacitors ensure mains buffering of over 20 ms at full load. Full output power is provided by all three-phase devices, even in the event of a permanent phase failure. The Power Boost power reserve easily starts loads with high inrush currents and ensures that fuses are reliably tripped. Preventive function monitoring diagnoses impermissible operating states and minimizes downtimes in your system. Remote monitoring is provided by an active transistor switching output and a floating relay contact. All devices are idling-proof and short-circuit-proof, and are available with a regulated and adjustable output voltage of 12, 24, and 48 V DC with output currents of 2.5, 5, 10, 20, 30, and 40 A. Power supply units for use in Ex zone 2, uninterruptible solutions, AS-i power supply units, and a QUINT diode complete this comprehensive product range.



Key Commercial Data

Packing unit	1 pc
GTIN	4 017918 910006
GTIN	4017918910006
Weight per Piece (excluding packing)	3,940.000 g
Custom tariff number	85044030
Country of origin	Germany

Technical data

Dimensions

Width	240 mm
Height	130 mm
Depth	125 mm
Width with alternative assembly	122 mm

Power supply unit - QUINT-PS-3X400-500AC/24DC/40 - 2938646

Technical data

Dimensions

Height with alternative assembly	130 mm
Depth with alternative assembly	243 mm

Ambient conditions

Degree of protection	IP20
Ambient temperature (operation)	-25 °C ... 70 °C (> 60 °C Derating: 2.5 %/K)
Ambient temperature (storage/transport)	-40 °C ... 85 °C
Max. permissible relative humidity (operation)	95 % (at 25 °C, non-condensing)
Climatic class	3K3 (in acc. with EN 60721)
Degree of pollution	2

Input data

Nominal input voltage range	3x 400 V AC ... 500 V AC
Input voltage range	3x 320 V AC ... 575 V AC (for all three phases)
	450 V DC ... 800 V DC
AC frequency range	45 Hz ... 65 Hz
Frequency range DC	0 Hz
Discharge current to PE	< 3.5 mA
Current consumption	approx. 3x 2.8 A (400 V AC)
	approx. 3x 2.2 A (480 V AC)
Nominal power consumption	1048 W
Inrush current	< 15 A (typical)
Mains buffering time	> 20 ms (400 V AC)
	> 20 ms (480 V AC)
Recommended breaker for input protection	3x 6 A ... 16 A (Characteristics B, C, D, K)
Type of protection	Transient surge protection
Protective circuit/component	Varistor

Output data

Nominal output voltage	24 V DC ±1 %
Setting range of the output voltage (U_{Set})	22.5 V ... 28.5 V (> 24 V DC, constant capacity restricted)
Nominal output current (I_N)	40 A (-25 °C ... 70 °C)
POWER BOOST (I_{Boost})	45 A (-25°C ... 40°C permanent)
Derating	60 °C (2.5%/K)
Connection in parallel	Yes, for redundancy and increased capacity
Connection in series	yes
Feedback voltage resistance	35 V DC
Protection against overvoltage at the output (OVP)	≤ 35 V DC
Max. capacitive load	unlimited

Power supply unit - QUINT-PS-3X400-500AC/24DC/40 - 2938646

Technical data

Output data

Active current limitation	Approx. I_{BOOST} = 45 A (for short-circuit)
Control deviation	< 1 % (change in load, static 10 % ... 90 %)
	< 2 % (change in load, dynamic 10 % ... 90 %)
	< 0.1 % (change in input voltage ±10 %)
Residual ripple	< 10 mV_{PP} (with nominal values)
Output power	960 W
Typical response time	< 1 s
Peak switching voltages nominal load	< 60 mV_{PP} (20 MHz)
Maximum power dissipation in no-load condition	< 14 W
Power loss nominal load max.	< 80 W

General

Net weight	3.5 kg
Operating voltage display	Green LED
Efficiency	> 91 % (for 230 V AC and nominal values)
MTBF (IEC 61709, SN 29500)	> 500000 h
Insulation voltage input/output	4 kV AC (type test)
	2 kV AC (routine test)
Insulation voltage input / PE	3.5 kV AC (type test)
	2 kV AC (routine test)
Insulation voltage output / PE	500 V DC (routine test)
Degree of protection	IP20
Protection class	I (with PE connection)
Mounting position	horizontal DIN rail NS 35, EN 60715
Assembly instructions	alignable: horizontally 0 mm, vertically 50 mm

Connection data, input

Connection method	Screw connection
Conductor cross section solid min.	0.2 mm²
Conductor cross section solid max.	6 mm²
Conductor cross section flexible min.	0.2 mm²
Conductor cross section flexible max.	4 mm²
Conductor cross section AWG min.	24
Conductor cross section AWG max.	10
Stripping length	8 mm
Screw thread	M3

Connection data, output

Connection method	Screw connection

Power supply unit - QUINT-PS-3X400-500AC/24DC/40 - 2938646

Technical data

Connection data, output

Conductor cross section solid min.	0.5 mm²
Conductor cross section solid max.	16 mm²
Conductor cross section flexible min.	0.5 mm²
Conductor cross section flexible max.	10 mm²
Conductor cross section AWG min.	20
Conductor cross section AWG max.	6
Stripping length	10 mm
Screw thread	M4

Signaling

Output name	DC OK active
Output description	U_{OUT} > 0.9 x U_N: High signal
Maximum switching voltage	≤ 24 V
Output voltage	+ 24 V DC (Signal)
Maximum inrush current	≤ 40 mA
Continuous load current	≤ 40 mA
Status display	"DC OK" LED green
Note on status display	U_{OUT} < 0.9 x U_N: LED flashing
Conductor cross section solid min.	0.5 mm²
Conductor cross section solid max.	16 mm²
Conductor cross section flexible min.	0.5 mm²
Conductor cross section flexible max.	10 mm²
Conductor cross section AWG min.	20
Conductor cross section AWG max.	6
Tightening torque, min	1.2 Nm
Tightening torque max	1.5 Nm
Screw thread	M4
Output name	DC OK floating
Output description	Relay contact, U_{OUT} > 0.9 x U_N: Contact closed
Maximum switching voltage	≤ 30 V AC/DC
Maximum inrush current	≤ 1 A
Continuous load current	≤ 1 A
Status display	"DC OK" LED green

Standards and Regulations

Electromagnetic compatibility	Conformance with EMC Directive 2014/30/EU
Noise emission	EN 55011 (EN 55022)
Noise immunity	EN 61000-6-2

Power supply unit - QUINT-PS-3X400-500AC/24DC/40 - 2938646

Technical data

Standards and Regulations

Connection in acc. with standard	CUL
Standards/regulations	EN 61000-4-2
Contact discharge	8 kV
Standards/regulations	EN 61000-4-3
Frequency range	80 MHz ... 2 GHz
Test field strength	10 V/m
Standards/regulations	EN 61000-4-4
Comments	Criterion B
Standards/regulations	EN 61000-6-3
	EN 61000-4-6
Frequency range	0.15 MHz ... 80 MHz
Voltage	10 V
Standards/regulations	EN 61000-4-11
Low Voltage Directive	Conformance with Low Voltage Directive 2014/35/EC
Standard - Safety of transformers	EN 61558-2-17
Standard - Electrical safety	EN 60950-1/VDE 0805 (SELV)
	EN 61558-2-17
Standard – Electronic equipment for use in electrical power installations and their assembly into electrical power installations	EN 50178/VDE 0160 (PELV)
Standard – Safety extra-low voltage	EN 60950-1 (SELV)
	EN 60204 (PELV)
Standard - Safe isolation	DIN VDE 0100-410
Standard – Protection against shock currents, basic requirements for protective separation in electrical equipment	EN 50178
Standard – Limitation of mains harmonic currents	EN 61000-3-2
Standard - Equipment safety	GS (tested safety)
Shipbuilding approval	DNV GL (EMC A), ABS
UL approvals	UL/C-UL listed UL 508
	UL/C-UL Recognized UL 60950-1
	UL/C-UL Listed UL 1604 Class I, Division 2, Groups A, B, C, D
Shock	18 ms, 30g, in each space direction (according to IEC 60068-2-27)
Vibration (operation)	< 15 Hz, amplitude ±2.5 mm (according to IEC 60068-2-6)
	15 Hz ... 150 Hz, 2.3g, 90 min.
Certificate	CB Scheme
Overvoltage category (EN 62477-1)	III

Environmental Product Compliance

REACh SVHC	Lead 7439-92-1

Power supply unit - QUINT-PS-3X400-500AC/24DC/40 - 2938646

Technical data

Environmental Product Compliance

China RoHS	Environmentally Friendly Use Period = 50 years
	For details about hazardous substances go to tab “Downloads”, Category “Manufacturer's declaration”

Drawings

Block diagram

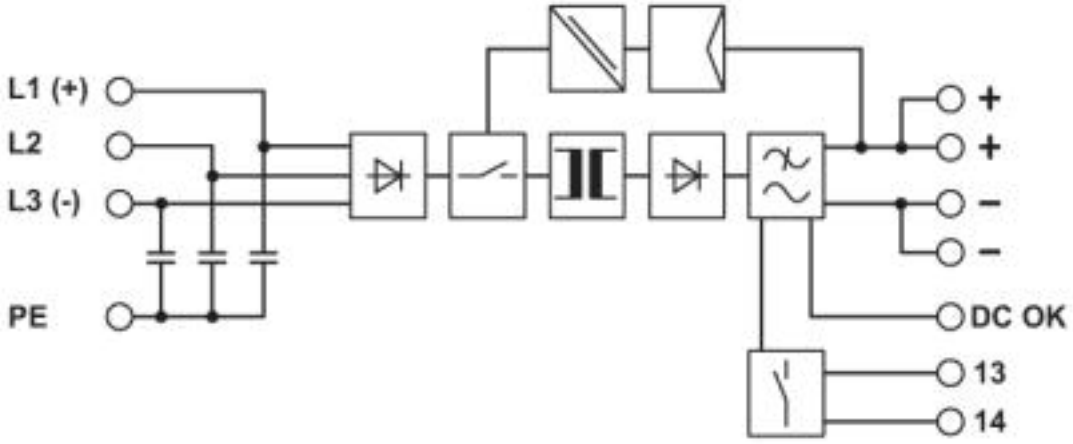

Classifications

eCl@ss

eCl@ss 10.0.1	27040701
eCl@ss 4.0	27040700
eCl@ss 4.1	27040700
eCl@ss 5.0	27049000
eCl@ss 5.1	27049000
eCl@ss 6.0	27049000
eCl@ss 7.0	27049002
eCl@ss 8.0	27049002
eCl@ss 9.0	27040701

ETIM

ETIM 2.0	EC001039
ETIM 3.0	EC001039
ETIM 4.0	EC000599
ETIM 5.0	EC002540

Power supply unit - QUINT-PS-3X400-500AC/24DC/40 - 2938646

Classifications

ETIM

ETIM 6.0	EC002540
ETIM 7.0	EC002540

UNSPSC

UNSPSC 6.01	30211502
UNSPSC 7.0901	39121004
UNSPSC 11	39121004
UNSPSC 12.01	39121004
UNSPSC 13.2	39121004
UNSPSC 18.0	39121004
UNSPSC 19.0	39121004
UNSPSC 20.0	39121004
UNSPSC 21.0	39121004

Approvals

Approvals

Approvals

PRS / ABS / UL Listed / UL Recognized / cUL Recognized / IECEE CB Scheme / cUL Listed / SEMI F47 / EAC / DNV GL / EAC / cULus Recognized / cULus Listed

Ex Approvals

UL Listed / cUL Listed / cULus Listed

Approval details

PRS		http://www.prs.pl/	TE/2104/880590/16
ABS		http://www.eagle.org/eagleExternalPortalWEB/	15-HG1384628-PDA
UL Listed		http://database.ul.com/cgi-bin/XYV/template/LISEXT/1FRAME/index.htm	FILE E 123528

Power supply unit - QUINT-PS-3X400-500AC/24DC/40 - 2938646

Approvals

UL Recognized	http://database.ul.com/cgi-bin/XYV/template/LISEXT/1FRAME/index.htm	FILE E 211944
cUL Recognized	http://database.ul.com/cgi-bin/XYV/template/LISEXT/1FRAME/index.htm	FILE E 211944
IECEE CB Scheme	http://www.iecee.org/	SI-937
cUL Listed	http://database.ul.com/cgi-bin/XYV/template/LISEXT/1FRAME/index.htm	FILE E 123528
SEMI F47		SEMI F47
EAC		EAC-Zulassung
DNV GL	https://approvalfinder.dnvgl.com/	TAA0000249
EAC		RU*DE*08.B.01873/19
cULus Recognized		
cULus Listed		

Power supply unit - QUINT-PS-3X400-500AC/24DC/40 - 2938646

Accessories

Accessories

Assembly adapter

Assembly adapters - UWA 182/52 - 2938235



Universal wall adapter for securely mounting the device in the event of strong vibrations. The device is screwed directly onto the mounting surface. The universal wall adapter is attached on the top/bottom.

Device protection

Type 3 surge protection device - PLT-SEC-T3-3S-230-FM - 2905230



Plug-in device protection, according to type 3/class III, for 3-phase power supply networks with separate N and PE (5-conductor system: L1, L2, L3, N, PE), with integrated surge-proof fuse and remote indication contact.

Type 3 surge protection device - PLT-SEC-T3-24-FM-UT - 2907916



Type 3 surge protection, consisting of protective plug and base element, with integrated status indicator and remote signaling for single-phase power supply networks. Nominal voltage 24 V AC/DC.

Mounting rail adapter

DIN rail adapter - UTA 107 - 2853983

Universal DIN rail adapter, for screwing on switchgear



Phoenix Contact 2020 © - all rights reserved
http://www.phoenixcontact.com