Relay Module - PLC-RSC- 48DC/21 - 2966113

Please be informed that the data shown in this PDF Document is generated from our Online Catalog. Please find the complete data in the user's documentation. Our General Terms of Use for Downloads are valid (http://phoenixcontact.com/download)



PLC relay, consisting of base terminal block PLC-BSC.../21 with screw connection and pluggable miniature relay with power contact, for assembly on DIN rail NS 35/7.5, 1 PDT, input voltage 48 V DC

Your advantages

- Slim design
- Efficient connection to system cabling using V8 adapter
- RT III sealed relay
- Safe isolation according to DIN EN 50178 between coil and contact
- Functional plug-in bridges
- Integrated input circuit and interference suppression circuit

Key Commercial Data

Packing unit	1 pc
GTIN	4 017918 161972
GTIN	4017918161972
Weight per Piece (excluding packing)	35.730 g
Custom tariff number	85364190
Country of origin	Germany

Technical data

Note

Utilization restriction	EMC: class A product, see manufacturer's declaration in the download area

Dimensions

Width	6.2 mm

Relay Module - PLC-RSC- 48DC/21 - 2966113

Technical data

Dimensions

Height	80 mm
Depth	94 mm

Ambient conditions

Ambient temperature (operation)	-40 °C ... 60 °C
Ambient temperature (storage/transport)	-40 °C ... 85 °C
Degree of protection	IP20 (Relay base)

Coil side

Nominal input voltage U_N	48 V DC
Typical input current at U_N	9.2 mA
Typical response time	5 ms
Typical release time	8 ms
Protective circuit	Reverse polarity protection Polarity protection diode
	Free-wheeling diode Damping diode
Operating voltage display	yes
Power dissipation for nominal condition	0.44 W

Contact side

Contact type	1 PDT
Type of switch contact	Single contact
Contact material	AgSnO
Maximum switching voltage	250 V AC/DC (The separating plate PLC-ATP should be installed for voltages larger than 250 V (L1, L2, L3) between identical terminal blocks in adjacent modules. Potential bridging is then carried out with FBST 8-PLC... or ...FBST 500...)
Minimum switching voltage	5 V (at 100 mA)
Min. switching current	10 mA (at 12 V)
Maximum inrush current	10 A (4 s)
Limiting continuous current	6 A
Interrupting rating (ohmic load) max.	140 W (at 24 V DC)
	20 W (at 48 V DC)
	18 W (at 60 V DC)
	23 W (at 110 V DC)
	40 W (at 220 V DC)
	1500 VA (for 250 V AC)
Switching capacity	2 A (at 24 V, DC13)
	0.2 A (at 110 V, DC13)
	0.1 A (at 220 V, DC13)
	3 A (at 24 V, AC15)

Relay Module - PLC-RSC- 48DC/21 - 2966113

Technical data

Contact side

	3 A (at 120 V, AC15)
	3 A (at 230 V, AC15)

General

Test voltage relay winding/relay contact	4 kV AC (50 Hz, 1 min.)
Operating mode	100% operating factor
Mechanical service life	2x 10^7 cycles
Mounting position	any
Assembly instructions	In rows with zero spacing

Connection data

Connection name	Coil side
Connection method	Screw connection
Stripping length	8 mm
Screw thread	M3
Conductor cross section solid	0.14 mm² ... 2.5 mm²
Conductor cross section flexible	0.14 mm² ... 2.5 mm²
	0.2 mm² ... 2.5 mm² (Single ferrule)
	2x 0.5 mm² ... 1.5 mm² (TWIN ferrule)
Conductor cross section AWG	26 ... 14

Connection data 2

Connection name	Contact side
Connection method	Screw connection
Stripping length	8 mm
Screw thread	M3
Conductor cross section solid	0.14 mm² ... 2.5 mm²
Conductor cross section flexible	0.14 mm² ... 2.5 mm²
	0.2 mm² ... 2.5 mm² (Single ferrule)
	2x 0.5 mm² ... 1.5 mm² (TWIN ferrule)
Conductor cross section AWG	26 ... 14

Standards and Regulations

Connection in acc. with standard	CUL
Designation	Standards/regulations
Standards/regulations	IEC 60664
	EN 50178
Pollution degree	3
Overvoltage category	III

Relay Module - PLC-RSC- 48DC/21 - 2966113

Technical data

Environmental Product Compliance

	Lead 7439-92-1
China RoHS	Environmentally Friendly Use Period = 50
	For details about hazardous substances go to tab “Downloads”, Category “Manufacturer's declaration”

Drawings

Diagram

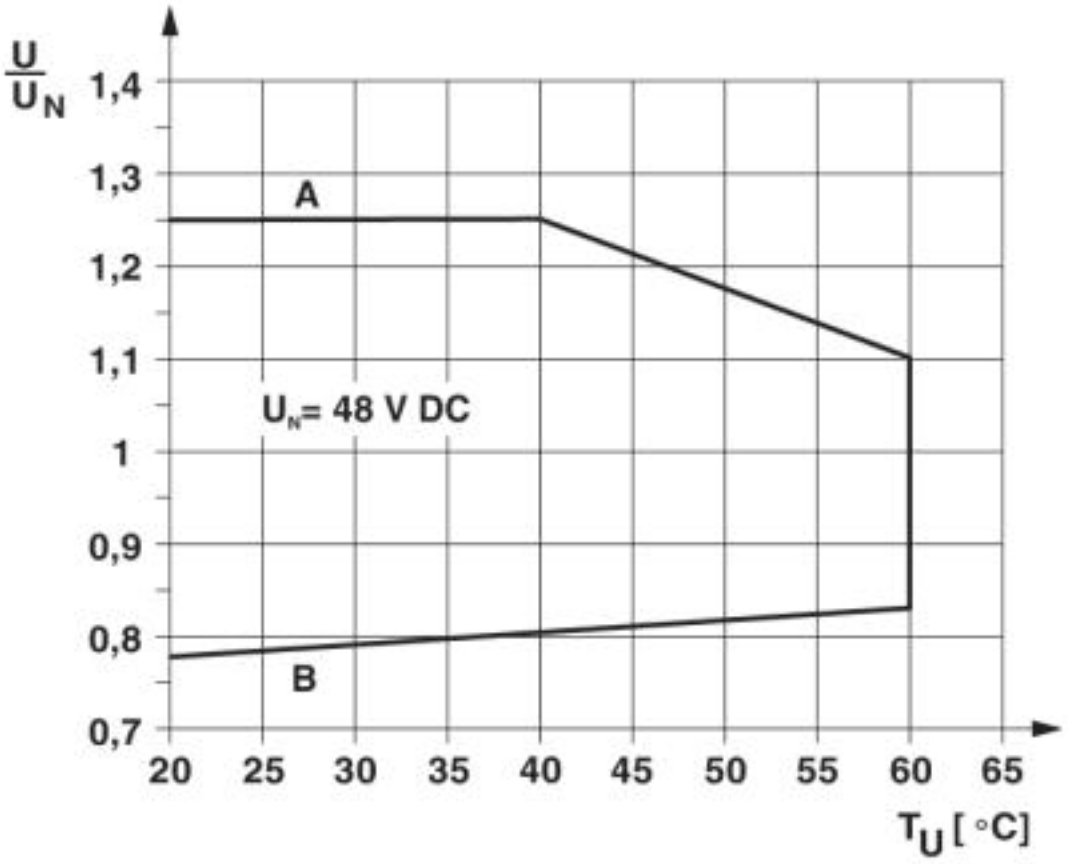

Curve A
Maximum permissible continuous voltage U_{max} with limiting continuous current on the contact side (see relevant technical data)
Curve B
Minimum permissible operate voltage U_{op} after pre-excitation (see relevant technical data)

Relay Module - PLC-RSC- 48DC/21 - 2966113

Diagram

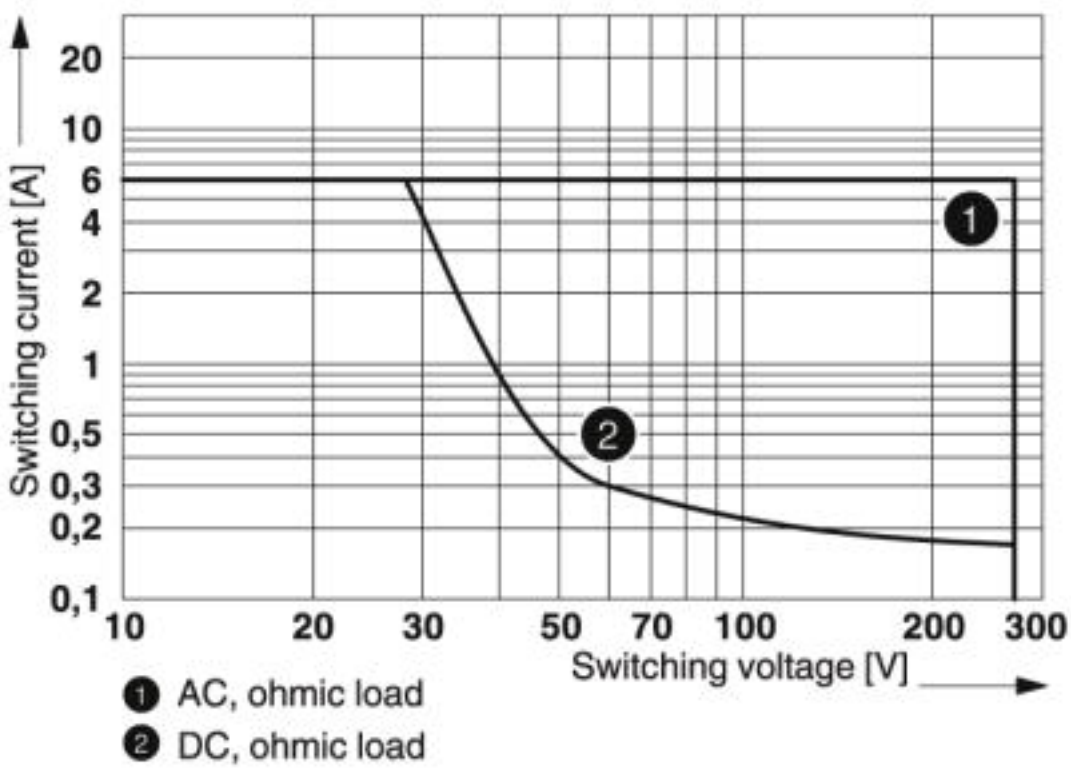

Interrupting rating

Relay Module - PLC-RSC- 48DC/21 - 2966113

Circuit diagram

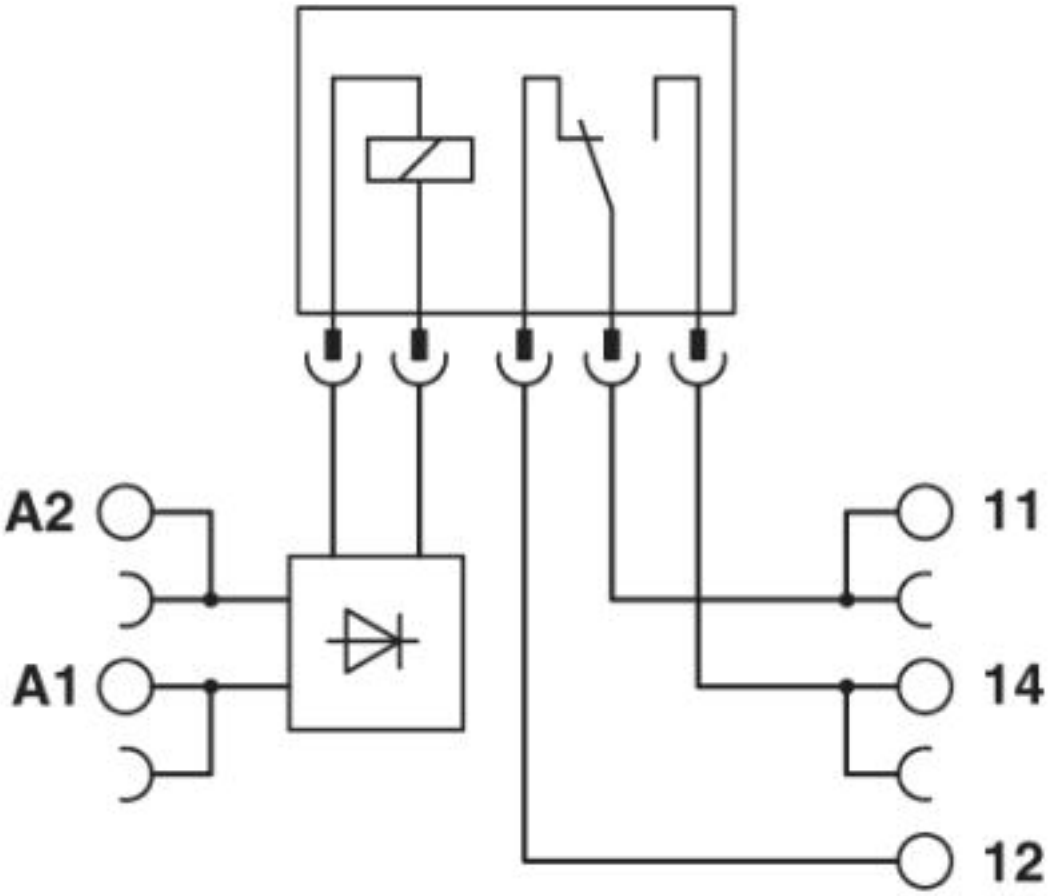

Classifications

eCl@ss

eCl@ss 4.0	27371100
eCl@ss 4.1	27371100
eCl@ss 5.0	27371600
eCl@ss 5.1	27371600
eCl@ss 6.0	27371600
eCl@ss 7.0	27371601
eCl@ss 8.0	27371601
eCl@ss 9.0	27371601

ETIM

ETIM 2.0	EC001437

Relay Module - PLC-RSC- 48DC/21 - 2966113

Classifications

ETIM

ETIM 3.0	EC001437
ETIM 4.0	EC001437
ETIM 5.0	EC001437
ETIM 6.0	EC001437
ETIM 7.0	EC001437

UNSPSC

UNSPSC 6.01	30211916
UNSPSC 7.0901	39121515
UNSPSC 11	39121515
UNSPSC 12.01	39121515
UNSPSC 13.2	39122334

Approvals

Approvals

Approvals

PRS / UL Listed / UL Recognized / cUL Recognized / cUL Listed / RC FRT / DNV GL / EAC / EAC / cULus Recognized / cULus Listed

Ex Approvals

Approval details

PRS	http://www.prs.pl/	TE/2109/880590/16
UL Listed	http://database.ul.com/cgi-bin/XYV/template/LISEXT/1FRAME/index.htm	FILE E 172140
UL Recognized	http://database.ul.com/cgi-bin/XYV/template/LISEXT/1FRAME/index.htm	FILE E 238705

Relay Module - PLC-RSC- 48DC/21 - 2966113

Approvals

cUL Recognized		http://database.ul.com/cgi-bin/XYV/template/LISEXT/1FRAME/index.htm	FILE E 238705
cUL Listed		http://database.ul.com/cgi-bin/XYV/template/LISEXT/1FRAME/index.htm	FILE E 172140
RC FRT			B.00094
DNV GL		https://approvalfinder.dnvgl.com/	TAE0000196-02
EAC			TR_TS_D_00573_c
EAC			TR_TS_S_00010_c
cULus Recognized			
cULus Listed			

Accessories

Accessories

Bridge

Relay Module - PLC-RSC- 48DC/21 - 2966113

Accessories

Continuous plug-in bridge - FBST 500-PLC RD - 2966786



Continuous plug-in bridge, length: 500 mm, color: red

Continuous plug-in bridge - FBST 500-PLC BU - 2966692



Continuous plug-in bridge, length: 500 mm, color: blue

Continuous plug-in bridge - FBST 500-PLC GY - 2966838



Continuous plug-in bridge, length: 500 mm, color: gray

Single plug-in bridge - FBST 6-PLC RD - 2966236



Single plug-in bridge, length: 6 mm, number of positions: 2, color: red

Single plug-in bridge - FBST 6-PLC BU - 2966812



Single plug-in bridge, length: 6 mm, number of positions: 2, color: blue

Relay Module - PLC-RSC- 48DC/21 - 2966113

Accessories

Single plug-in bridge - FBST 6-PLC GY - 2966825



Single plug-in bridge, length: 6 mm, number of positions: 2, color: gray

Single plug-in bridge - FBST 8-PLC GY - 2967688



Single plug-in bridge, length: 8 mm, number of positions: 2, color: gray

DIN rail

DIN rail, unperforated - NS 35/ 7,5 V2A UNPERF 2000MM - 0801377



DIN rail, unperforated, Standard profile, width: 35 mm, height: 7.5 mm, acc. to EN 60715, material: Stainless steel V2A, uncoated, length: 2000 mm, color: silver

DIN rail perforated - NS 35/ 7,5 PERF 2000MM - 0801733



DIN rail perforated, Standard profile, width: 35 mm, height: 7.5 mm, acc. to EN 60715, material: Steel, galvanized, passivated with a thick layer, length: 2000 mm, color: silver

DIN rail, unperforated - NS 35/ 7,5 CU UNPERF 2000MM - 0801762



DIN rail, unperforated, Standard profile, width: 35 mm, height: 7.5 mm, acc. to EN 60715, material: Copper, uncoated, length: 2000 mm, color: copper-colored

Relay Module - PLC-RSC- 48DC/21 - 2966113

Accessories

DIN rail, unperforated - NS 35/15 UNPERF 2000MM - 1201714



DIN rail, unperforated, Standard profile, width: 35 mm, height: 15 mm, similar to EN 60715, material: Steel, galvanized, passivated with a thick layer, length: 2000 mm, color: silver

DIN rail, unperforated - NS 35/15 CU UNPERF 2000MM - 1201895



DIN rail, unperforated, Standard profile, width: 35 mm, height: 15 mm, similar to EN 60715, material: Copper, uncoated, length: 2000 mm, color: copper-colored

DIN rail, unperforated - NS 35/15-2,3 UNPERF 2000MM - 1201798



DIN rail, unperforated, Standard profile 2.3 mm, width: 35 mm, height: 15 mm, acc. to EN 60715, material: Steel, galvanized, passivated with a thick layer, length: 2000 mm, color: silver

DIN rail, unperforated - NS 35/15 AL UNPERF 2000MM - 1201756



DIN rail, unperforated, Standard profile, width: 35 mm, height: 15 mm, similar to EN 60715, material: Aluminum, uncoated, length: 2000 mm, color: silver

DIN rail perforated - NS 35/15 PERF 2000MM - 1201730



DIN rail perforated, Standard profile, width: 35 mm, height: 15 mm, similar to EN 60715, material: Steel, galvanized, passivated with a thick layer, length: 2000 mm, color: silver

Relay Module - PLC-RSC- 48DC/21 - 2966113

Accessories

DIN rail, unperforated - NS 35/ 7,5 UNPERF 2000MM - 0801681



DIN rail, unperforated, Standard profile, width: 35 mm, height: 7.5 mm, acc. to EN 60715, material: Steel, galvanized, passivated with a thick layer, length: 2000 mm, color: silver

---

Labeled terminal marker

Zack marker strip - ZB 6,LGS:FORTL.ZAHLEN - 1051016



Zack marker strip, Strip, white, labeled, can be labeled with: CMS-P1-PLOTTER, printed horizontally: consecutive numbers 1 ... 10, 11 ... 20, etc. up to 491 ... 500, mounting type: snap into tall marker groove, for terminal block width: 6.2 mm, lettering field size: 6.15 x 10.5 mm, Number of individual labels: 10

Partition plate

Separating plate - PLC-ATP BK - 2966841



Separating plate, 2 mm thick, required at the start and end of a PLC terminal strip. Furthermore, it is used for: visual separation of groups, safe isolation of different voltages of neighboring PLC relays in acc. with DIN VDE 0106-101, isolation

---

Power module

Power terminal block - PLC-ESK GY - 2966508



Power terminal block, for the input of up to four potentials, for mounting on NS 35/7.5

Screwdriver tools

Relay Module - PLC-RSC- 48DC/21 - 2966113

Accessories

Screwdriver - SZF 1-0,6X3,5 - 1204517



Actuation tool, for ST terminal blocks, also suitable for use as a bladed screwdriver, size: 0.6 x 3.5 x 100 mm, 2-component grip, with non-slip grip

---

Terminal marking

Zack marker strip - ZB 6:UNBEDRUCKT - 1051003



Zack marker strip, Strip, white, unlabeled, can be labeled with: PLOTMARK, CMS-P1-PLOTTER, mounting type: snap into tall marker groove, for terminal block width: 6.2 mm, lettering field size: 6.15 x 10.5 mm, Number of individual labels: 10

Zack marker strip - ZB 6/WH-100:UNBEDRUCKT - 5060935



Zack marker strip, Strip, white, unlabeled, can be labeled with: PLOTMARK, CMS-P1-PLOTTER, mounting type: snap into tall marker groove, for terminal block width: 6.2 mm, lettering field size: 6.15 x 10.5 mm, Number of individual labels: 10

Marker for terminal blocks - UC-TM 6 - 0818085



Marker for terminal blocks, Sheet, white, unlabeled, can be labeled with: BLUEMARK ID COLOR, BLUEMARK ID, BLUEMARK CLED, PLOTMARK, CMS-P1-PLOTTER, mounting type: snap into tall marker groove, for terminal block width: 6.2 mm, lettering field size: 5.6 x 10.5 mm, Number of individual labels: 80

Marker for terminal blocks - UCT-TM 6 - 0828736



Marker for terminal blocks, Sheet, white, unlabeled, can be labeled with: TOPMARK NEO, TOPMARK LASER, BLUEMARK ID COLOR, BLUEMARK ID, BLUEMARK CLED, THERMOMARK PRIME, THERMOMARK CARD 2.0, THERMOMARK CARD, mounting type: snap into tall marker groove, for terminal block width: 6.2 mm, lettering field size: 5.6 x 10.5 mm, Number of individual labels: 60

Relay Module - PLC-RSC- 48DC/21 - 2966113

Accessories

Spare parts

Relay base - PLC-BSC- 48DC/21 - 2966090



6.2 mm PLC basic terminal block with screw connection, without relay or solid-state relay, for mounting on DIN rail NS 35/7,5, 1 PDT, input voltage 48 V DC

Single relay - REL-MR- 24DC/21 - 2961105



Plug-in miniature power relay, with power contact, 1 PDT, input voltage 24 V DC

Phoenix Contact 2019 © - all rights reserved
http://www.phoenixcontact.com