Electronic device circuit breaker - CBM E8 24DC/0.5-10A NO-R - 2905744

Please be informed that the data shown in this PDF Document is generated from our Online Catalog. Please find the complete data in the user's documentation. Our General Terms of Use for Downloads are valid (http://phoenixcontact.com/download)



Multi-channel, electronic device circuit breaker with active current limitation for protecting eight loads at 24 V DC in the event of overload and short circuit. With nominal current assistant and electronic locking of the set nominal currents. For installation on DIN rails.

Your advantages

- Easy to configure, thanks to the nominal current assistant
- Active current limitation to improve the capacity of the upstream power supply
- Adjustable in increments per channel:
from 0.5 A to 10 A
- Easy system monitoring with early signaling and direct pickup of information at the product
- Increased system availability with intelligent detection of under- and overvoltage

Key Commercial Data

Packing unit	1 pc
GTIN	4 046356 992367
GTIN	4046356992367
Weight per Piece (excluding packing)	320.000 g
Custom tariff number	85362010
Country of origin	Germany

Technical data

Dimensions

Height	130 mm
Width	41 mm
Depth	121 mm (incl. DIN rail 7.5 mm)

Electronic device circuit breaker - CBM E8 24DC/0.5-10A NO-R - 2905744

Technical data

Ambient conditions

Ambient temperature (operation)	-25 °C ... 70 °C (Startup at -40 C type-tested)
	-25 °C ... 65 °C (for UL 2367)
Ambient temperature (storage/transport)	-40 °C ... 80 °C
Humidity test	240 h, 95 % RH, 40 °C
Altitude	≤ 6000 m (amsl (above mean sea level))
Shock (operation)	30g (IEC 60068-2-27, Test Ea)
Vibration (operation)	5 Hz ... 24.9 Hz (Amplitude ±1.6 mm; in accordance with IEC 60068-2-6, Test Fc)
	24.9 Hz … 150 Hz (Acceleration 4g; in accordance with IEC 60068-2-6, Test Fc with additional resonance frequency testing in accordance with DNV GL)
Degree of protection	IP20

General

Flammability rating according to UL 94	V-0
Mounting type	DIN rail: 35 mm
Color	light grey RAL 7035
Number of positions	1
Protection class	III
Degree of pollution	2
Type	DIN rail module, one-piece

Electrical data

Fuse type	electronic
Rated surge voltage	0.5 kV
Operating voltage	18 V DC ... 30 V DC
Rated voltage	24 V DC
Rated current I_N	max. 80 A DC (for double supply IN+ with at least 2 x 6 mm²)
	max. 70 A DC (for UL 2367)
	0.5 / 1 / 2 / 4 / 6 / 10 A DC (adjustable per output channel)
Measuring tolerance I	typ. 40 % (0.5 A ... 1 A)
	typ. 10 % (2 - 10 A)
Feedback resistance	max. 35 V DC
Fail-safe element	15 A DC (per output channel)
Active current limitation	typ. 2.0 x I_N (0.5 - 1 A)
	typ. 1.5 x I_N (2 - 10 A)
Efficiency	> 99 %
Closed circuit current I_0	typ. 50 mA
Power dissipation	1.2 W (No-load operation)

Electronic device circuit breaker - CBM E8 24DC/0.5-10A NO-R - 2905744

Technical data

Electrical data

	17.2 W (Nominal operation)
Module initialization time	3.3 s
Waiting time after switch off of a channel	10 s (at overload / short circuit)
Temperature derating	40 A DC (at 70°C (65°C for UL 2367))
	50 A DC (at 60 °C)
	60 A DC (at 50 °C)
	70 A DC (at 40 °C)
	80 A DC (at 40 °C)
	70 A DC (at 40°C for UL 2367)
Tripping method	E (electronic)
Required backup fuse	Only required if I_{max} of the power supply > the short-circuit switching capacity. Integrated failsafe element.
Short-circuit switching capacity	300 A
Dielectric strength	max. 30 V DC (Load circuit)
MTBF (IEC 61709, SN 29500)	1304293 h (at 25 °C)
	858501 h (at 40 °C)
	440048 h (at 60 °C)
Shutdown time load circuit	0.02 s (> 1.3 x I_N)
	30 s (1.1 ... 1.3 x I_N)
Undervoltage switch-off load circuit	≤ 17.8 V DC (active)
	≥ 19 V DC (inactive)
Overvoltage switch-off shutdown load circuit	≥ 30.5 V DC (active)
	≤ 29.5 V DC (inactive)
Max. capacitive load load circuit	75000 µF
Output voltage status output	24 V DC
Output current status output	max. 20 mA (when I > 80% at at least one channel)
Input voltage reset input	7 V DC ... 30 V DC (Reset with falling edge)
Current consumption reset input	typ. 0.4 mA (at 24 V DC)
Pulse length reset input	≥ 50 ms (High signal)
	≥ 50 ms (Low signal)
Voltage reset input	< 5 V DC (Low signal)
	> 8 V DC (High signal)

Remote indication contact

Connection name	Remote indication circuit
Switching function	N/O contact
Stripping length	10 mm
Conductor cross section solid	0.2 mm² ... 2.5 mm²

Electronic device circuit breaker - CBM E8 24DC/0.5-10A NO-R - 2905744

Technical data

Remote indication contact

Conductor cross section AWG	24 ... 12
Conductor cross section, flexible, with ferrule, with plastic sleeve	1.5 mm² ... 0.25 mm²
Conductor cross section flexible, with ferrule without plastic sleeve	0.25 mm² ... 2.5 mm²
DC operating voltage	0 V DC ... 30 V DC
DC operating current	1 mA DC ... 100 mA DC

Signaling

Channel LED off	off (Channel switched off)
Channel LED green	lit (Channel switched on)
	flashing (Channel switched on, programming mode active)
Channel LED yellow	lit (Channel switched on, channel load > 80%)
Channel LED yellow-green	flashing (Channel switched on, nominal current assistant active)
Channel LED red	lit (Channel switched off, over- or undervoltage active)
	ON temporarily (Channel switched off, 10 s cool-down phase, overload or short-circuit release)
	flashing (Channel switched off, ready to be switched back on, overload or short-circuit release)
Channel LED red-yellow	flashing (Channel switched on, overload mode, capacity approximately 110 ... 130% , shutdown after 30 s)
Channel LED red-green	flashing (Channel switched off, programming mode active, current adjustment after overload or short-circuit release)
DC OK LED off	off (No supply voltage)
DC OK LED green	lit (Operating voltage in nominal range 18 ... 30 V)
DC OK LED yellow	lit (Undervoltage active, voltage ≤ 17.8 V, active channels switched off and channel LEDs are lit red)
	flashing (Undervoltage switch-off inactive, device was in undervoltage switch-off)
DC OK LED red	lit (Overvoltage switch-off active, voltage ≥ 30.5 V, channels switched off and channel LEDs are lit red)
	flashing (Overvoltage switch-off inactive, device was in overvoltage shutdown)

Connection data

Connection name	Main circuit IN+
Connection method	Push-in connection
Stripping length	18 mm
Conductor cross section solid	0.75 mm² ... 16 mm²
Conductor cross section AWG	20 ... 4
Conductor cross section, flexible, with ferrule, with plastic sleeve	0.75 mm² ... 10 mm²
Conductor cross section flexible, with ferrule without plastic sleeve	0.75 mm² ... 16 mm²
Connection name	Main circuit IN-

Electronic device circuit breaker - CBM E8 24DC/0.5-10A NO-R - 2905744

Technical data

Connection data

Connection method	Push-in connection
Stripping length	10 mm
Conductor cross section solid	0.2 mm² ... 2.5 mm²
Conductor cross section AWG	24 ... 12
Conductor cross section, flexible, with ferrule, with plastic sleeve	0.25 mm² ... 1.5 mm²
Conductor cross section flexible, with ferrule without plastic sleeve	0.25 mm² ... 2.5 mm²
Connection name	Main circuit OUT
Connection method	Push-in connection
Stripping length	10 mm
Conductor cross section solid	0.2 mm² ... 2.5 mm²
Conductor cross section AWG	24 ... 12
Conductor cross section, flexible, with ferrule, with plastic sleeve	0.25 mm² ... 1.5 mm²
Conductor cross section flexible, with ferrule without plastic sleeve	0.25 mm² ... 2.5 mm²

Standards and Regulations

Standards/specifications	EN 61000-6-2 EMC – Immunity for industrial areas
	EN 61000-6-3 EMC – Emission for residential, business and commercial properties and small operations
	EN 60068-2-6 Environmental influences – Vibrations (sinusoidal)
	EN 60068-2-1 Environmental influences – Part 2-1: Tests – Test A: Cold
	EN 60068-2-2 Environmental influences – Part 2-2: Tests – Test B: Dry heat
	EN 60068-2-78 Environmental influences – Moisture and heat, constant

Conformance/approvals

Designation	UL approval
Identification	UL/C-UL Listed UL 508
	UL Recognized UL 2367
	UL ANSI/ISA-12.12.01 Class I, Division 2, Groups A, B, C, D (Hazardous Location)
Designation	Shipbuilding approval
Identification	DNV GL
Temperature	D
Humidity	B
Vibration	B
EMC	A
Enclosure	Required protection according to the Rules shall be provided upon installation on board

Environmental Product Compliance

Electronic device circuit breaker - CBM E8 24DC/0.5-10A NO-R - 2905744

Technical data

Environmental Product Compliance

REACh SVHC	Lead 7439-92-1
China RoHS	Environmentally friendly use period: unlimited = EFUP-e
	No hazardous substances above threshold values

Drawings

Diagram

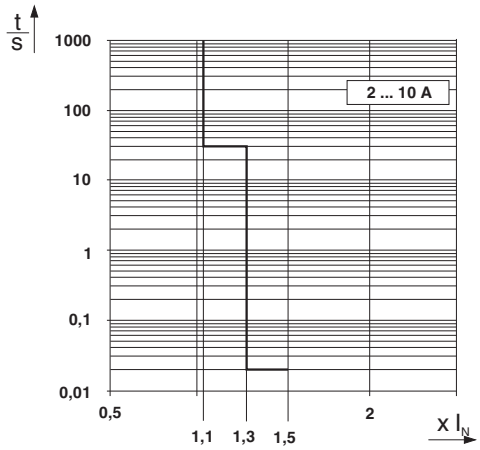

Trigger characteristic in the DC range

Diagram

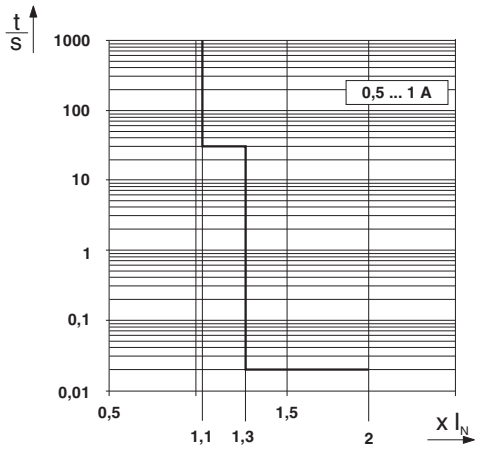

Trigger characteristic in the DC range

Electronic device circuit breaker - CBM E8 24DC/0.5-10A NO-R - 2905744

Dimensional drawing

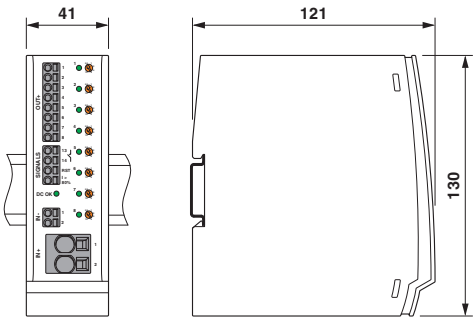

Product drawing



Application drawing

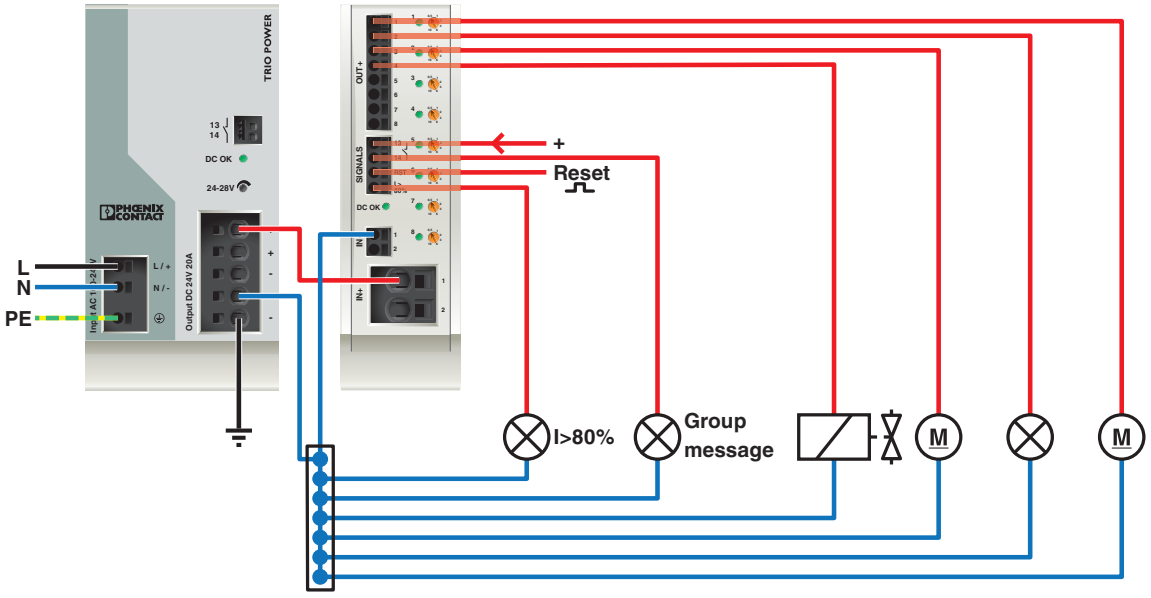

Electronic device circuit breaker - CBM E8 24DC/0.5-10A NO-R - 2905744

Classifications

eCl@ss

eCl@ss 10.0.1	27140401
eCl@ss 11.0	27140401
eCl@ss 4.0	27141100
eCl@ss 4.1	27141100
eCl@ss 5.0	27141100
eCl@ss 5.1	27141100
eCl@ss 6.0	27141100
eCl@ss 7.0	27141116
eCl@ss 8.0	27141116
eCl@ss 9.0	27141116

ETIM

ETIM 5.0	EC000899
ETIM 6.0	EC000899
ETIM 7.0	EC000899

UNSPSC

UNSPSC 13.2	39121410
UNSPSC 18.0	39121410
UNSPSC 19.0	39121410
UNSPSC 20.0	39121410
UNSPSC 21.0	39121410

Approvals

Approvals

Approvals

DNV GL / UL Listed / UL Recognized / cUL Listed / EAC / cULus Listed

Ex Approvals

UL Recognized / UL Listed / cUL Listed / cULus Listed

Approval details

Electronic device circuit breaker - CBM E8 24DC/0.5-10A NO-R - 2905744

Approvals

DNV GL		https://approvalfinder.dnvgl.com/	TAA00000U2
UL Listed		http://database.ul.com/cgi-bin/XYV/template/LISEXT/1FRAME/index.htm	FILE E 123528
UL Recognized		http://database.ul.com/cgi-bin/XYV/template/LISEXT/1FRAME/index.htm	FILE E 317172
cUL Listed		http://database.ul.com/cgi-bin/XYV/template/LISEXT/1FRAME/index.htm	FILE E 123528
EAC			RU C-DE.*09.B.00169
cULus Listed			

Accessories

Accessories

Power supply

Power supply unit - TRIO-PS-2G/1AC/24DC/3/C2LPS - 2903147



Primary-switched TRIO POWER power supply with push-in connection for DIN rail mounting, input: 1-phase, output: 24 V DC/3 A C2LPS

Electronic device circuit breaker - CBM E8 24DC/0.5-10A NO-R - 2905744

Accessories

Power supply unit - TRIO-PS-2G/1AC/24DC/5 - 2903148



Primary-switched TRIO POWER power supply with push-in connection for DIN rail mounting, input: 1-phase, output: 24 V DC/5 A

Power supply unit - TRIO-PS-2G/1AC/24DC/10 - 2903149



Primary-switched TRIO POWER power supply with push-in connection for DIN rail mounting, input: single phase, output: 24 V DC/10 A

Power supply unit - TRIO-PS-2G/1AC/24DC/20 - 2903151



Primary-switched TRIO POWER power supply with push-in connection for DIN rail mounting, input: single-phase, output: 24 V DC/20 A

Power supply unit - TRIO-PS-2G/3AC/24DC/5 - 2903153



Primary-switched TRIO POWER power supply with push-in connection for DIN rail mounting, input: 3-phase, output: 24 V DC/5 A

Power supply unit - TRIO-PS-2G/3AC/24DC/10 - 2903154



Primary-switched TRIO POWER power supply with push-in connection for DIN rail mounting, input: 3-phase, output: 24 V DC/10 A

Electronic device circuit breaker - CBM E8 24DC/0.5-10A NO-R - 2905744

Accessories

Power supply unit - TRIO-PS-2G/3AC/24DC/20 - 2903155



Primary-switched TRIO POWER power supply with push-in connection for DIN rail mounting, input: 3-phase, output: 24 V DC/20 A

Phoenix Contact 2021 © - all rights reserved
http://www.phoenixcontact.com