Bus coupler - IL ETH BK DI8 DO4 2TX-PAC - 2703981

Please be informed that the data shown in this PDF Document is generated from our Online Catalog. Please find the complete data in the user's documentation. Our General Terms of Use for Downloads are valid (http://phoenixcontact.com/download)



Inline, Bus coupler, Modbus/TCP(UDP), RJ45 jack, Digital inputs: 8, 24 V DC, connection method: 3-conductor, Digital outputs: 4, 24 V DC, 500 mA, connection method: 3-conductor, transmission speed in the local bus: 500 kbps / 2 Mbps, degree of protection: IP20, including Inline connectors and marking fields

Product Description

The bus coupler with integrated I/Os is intended for use within a Modbus/TCP (UDP) network and represents the link to the Inline I/O system.
Up to 61 Inline devices can be connected to the bus coupler.
The bus coupler supports a maximum of 16 PCP devices.

Your advantages

- 2 Ethernet ports (with integrated switch)
- Auto negotiation
- Autocrossing
- Transmission speed of 10 Mbps and 100 Mbps
- Automatic detection of the transmission speed in the local bus (500 kbps or 2 Mbps)
- Eight digital inputs, four digital outputs (on-board)
- Data exchange via OPC server supported
- Software interfaces for access via TCP/IP: Device Driver Interface (DDI) and High-Level Language Fieldbus Interface (HFI)
- Web-based management

RoHS

Modbus/TCP (UDP)

Key Commercial Data

Packing unit	1 pc
GTIN	4 046356 041157
GTIN	4046356041157
Weight per Piece (excluding packing)	340.000 g
Custom tariff number	85176200
Country of origin	Germany

Bus coupler - IL ETH BK DI8 DO4 2TX-PAC - 2703981

Technical data

Note

Utilization restriction	EMC: class A product, see manufacturer's declaration in the download area
	Use in potentially explosive areas is not permitted in China.

Dimensions

Width	80 mm
Height	119.8 mm
Depth	71.5 mm
Note on dimensions	Specfications with connectors

Ambient conditions

Ambient temperature (operation)	-25 °C ... 55 °C
Ambient temperature (storage/transport)	-40 °C ... 85 °C
Permissible humidity (operation)	10 % ... 95 % (non-condensing)
Permissible humidity (storage/transport)	10 % ... 95 % (non-condensing)
Air pressure (operation)	70 kPa ... 106 kPa (up to 3000 m above sea level)
Air pressure (storage/transport)	70 kPa ... 106 kPa (up to 3000 m above sea level)
Degree of protection	IP20

General

Mounting type	DIN rail mounting
Color	green
Net weight	341.14 g
Note on weight specifications	with connectors
Diagnostics messages	Short-circuit or overload of the digital outputs Yes
	Sensor supply failure Yes
	Failure of the actuator supply Yes

Interfaces

Designation	Modbus/TCP (UDP)
Number	2
Connection method	RJ45 jack
Note on the connection method	Auto negotiation and autocrossing
Transmission speed	10/100 Mbps
Transmission physics	Ethernet in RJ45 twisted pair
Designation	Inline local bus
Connection method	Inline data jumper
Transmission speed	500 kbps / 2 Mbps (automatic detection, no combined system)

Network/bus system

Bus coupler - IL ETH BK DI8 DO4 2TX-PAC - 2703981

Technical data

Network/bus system

Number of supported devices	max. 63 (per station)
Number of local bus devices that can be connected	max. 61 (The on-board I/Os are two devices)
Number of devices with parameter channel	max. 16
Number of supported branch terminals with remote bus branch	0

Inline potentials

Designation	Bus coupler supply U_{BC}; Communications power U_L (7.5 V) and the analog supply U_{ANA} (24 V) are generated from the bus coupler supply.
Supply voltage	24 V DC (via Inline connector)
Supply voltage range	19.2 V DC ... 30 V DC (including all tolerances, including ripple)
Current consumption	min. 80 mA (without connected I/O terminal blocks)
	max. 0.98 A (with max. number of connected I/O terminal blocks)
Designation	Communications power (U_L)
Supply voltage	7.5 V DC
Power supply unit	max. 0.8 A DC
Designation	Supply of analog modules (U_{ANA})
Supply voltage	24 V DC
Supply voltage range	19.2 V DC ... 30 V DC (including all tolerances, including ripple)
Power supply unit	max. 0.5 A DC
Designation	Main circuit supply (U_M)
Supply voltage	24 V DC (via Inline connector)
Supply voltage range	19.2 V DC ... 30 V DC (including all tolerances, including ripple)
Power supply unit	max. 8 A DC (Sum of U_M + U_S; 4 A, maximum, when used in potentially explosive areas.)
Current consumption	min. 3 mA (without sensors)
	max. 8 A DC
Designation	Segment circuit supply (U_S)
Supply voltage	24 V DC (via Inline connector)
Supply voltage range	19.2 V DC ... 30 V DC (including all tolerances, including ripple)
Power supply unit	max. 8 A DC (Sum of U_M + U_S; 4 A, maximum, when used in potentially explosive areas.)
Current consumption	max. 8 A DC
Type of protection	Surge protection (segment supply, main supply, bus coupler supply)
	Reverse polarity protection (segment supply, main supply, bus coupler supply)
Power consumption	typ. 3 W (entire device)
Current consumption	min. 3 mA (without actuators)

Digital inputs

Bus coupler - IL ETH BK DI8 DO4 2TX-PAC - 2703981

Technical data

Digital inputs

Input name	Digital inputs
Description of the input	EN 61131-2 type 1
Connection method	Inline connector
Connection technology	3-conductor
Number of inputs	8
Typical response time	approx. 500 µs
Protective circuit	Reverse polarity protection Suppressor diode
Nominal input voltage U_{IN}	24 V DC
Nominal input current at U_{IN}	typ. 3 mA
Input voltage	24 V DC
Input voltage range "0" signal	-30 V DC ... 5 V DC
Input voltage range "1" signal	15 V DC ... 30 V DC
Typical input current per channel	typ. 3 mA
Delay at signal change from 0 to 1	1.2 ms
Delay at signal change from 1 to 0	1.2 ms

Digital outputs

Output name	Digital outputs
Connection method	Inline connector
Connection technology	3-conductor
Number of outputs	4
Protective circuit	Short-circuit and overload protection Freewheeling circuit in the output driver
Output voltage	24 V DC -1 V (At nominal current)
Nominal output voltage	24 V DC
Nominal load, inductive	12 VA (1.2 H, 48 Ω)
Nominal load, lamp	12 W
Nominal load, ohmic	12 W
Limitation of the voltage induced on circuit interruption	approx. -30 V
Output current when switched off	max. 10 µA (When not loaded, a voltage can be measured even at an output that is not set.)
Behavior with overload	Auto restart
Behavior with inductive overload	Output can be destroyed
Reverse voltage resistance to short pulses	Reverse voltage proof

Standards and Regulations

Immunity to ESD	Noise immunity test in accordance with EN 61000-6-2 Electrostatic discharge (ESD) EN 61000-4-2/IEC 61000-4-2 Criterion B, 6 kV contact discharge, 8 kV air discharge

Bus coupler - IL ETH BK DI8 DO4 2TX-PAC - 2703981

Technical data

Standards and Regulations

Immunity to EF	Noise immunity test in accordance with EN 61000-6-2 Electromagnetic fields EN 61000-4-3/IEC 61000-4-3 Criterion A, Field intensity: 10 V/m
Immunity to burst	Noise immunity test in accordance with EN 61000-6-2 Fast transients (burst) EN 61000-4-4/IEC 61000-4-4 Criterion A, all interfaces 1 kVCriterion B, all interfaces 2 kV
Immunity to surge	Noise immunity test in accordance with EN 61000-6-2 Transient overvoltage (surge) EN 61000-4-5/IEC 61000-4-5 Criterion B, supply lines DC: 0.5 kV/0.5 kV (symmetrical/asymmetrical), fieldbus cable shield 1 kV
Immunity to conducted interference	Noise immunity test in accordance with EN 61000-6-2 Conducted interference EN 61000-4-6/IEC 61000-4-6 Criterion A, Test voltage 10 V
Interference emission	Noise emission test as per EN 61000-6-4 Class A
Mechanical tests	Vibration resistance in acc. with EN 60068-2-6/IEC 60068-2-6 5g
	Shock in acc. with EN 60068-2-27/IEC 60068-2-27 Operation: 25g, 11 ms duration, semi-sinusoidal shock impulse
Connection in acc. with standard	CUL
Protection class	III (IEC 61140, EN 61140, VDE 0140-1)

Environmental Product Compliance

REACh SVHC	Lead 7439-92-1
China RoHS	Environmentally friendly use period: unlimited = EFUP-e
	No hazardous substances above threshold values

Drawings

Dimensional drawing

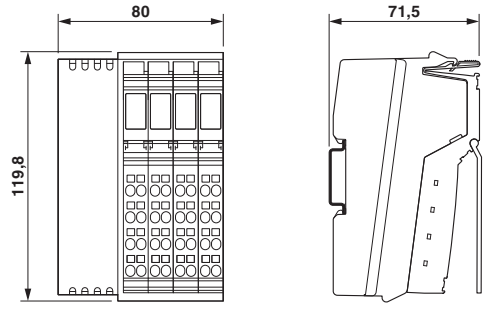

Connection diagram

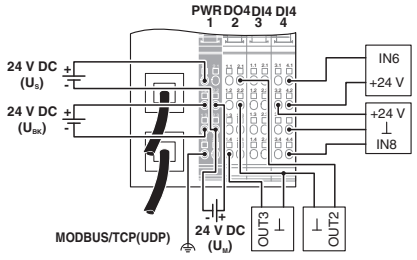

Bus coupler - IL ETH BK DI8 DO4 2TX-PAC - 2703981

Dimensional drawing

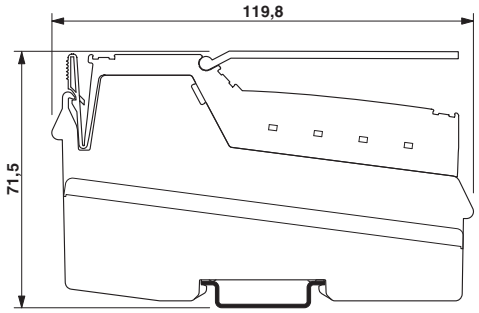

Classifications

eCl@ss

eCl@ss 10.0.1	27242608
eCl@ss 11.0	27242608
eCl@ss 4.0	27250200
eCl@ss 4.1	27250200
eCl@ss 5.0	27250200
eCl@ss 5.1	27242600
eCl@ss 6.0	27242600
eCl@ss 7.0	27242608
eCl@ss 8.0	27242608
eCl@ss 9.0	27242608

ETIM

ETIM 2.0	EC001434
ETIM 3.0	EC001604
ETIM 4.0	EC001604
ETIM 5.0	EC001604
ETIM 6.0	EC001604
ETIM 7.0	EC001604

UNSPSC

UNSPSC 6.01	43172015
UNSPSC 7.0901	43201404
UNSPSC 11	43172015
UNSPSC 12.01	43201404
UNSPSC 13.2	32151602
UNSPSC 18.0	32151602

Bus coupler - IL ETH BK DI8 DO4 2TX-PAC - 2703981

Classifications

UNSPSC

UNSPSC 19.0	32151602
UNSPSC 20.0	32151602
UNSPSC 21.0	32151602

Approvals

Approvals

Approvals

DNV GL / BV / GL / LR / GL-SW / RINA / UL Recognized / cUL Recognized / EAC / cULus Recognized / GL

Ex Approvals

UL Listed / cUL Listed / cULus Listed

Approval details

DNV GL	https://approvalfinder.dnvgl.com/	TAA00002CU
BV	http://www.veristar.com/portal/veristarinfo/generalinfo/approved/approvedProducts/equipmentAndMaterials	21725/B0 BV
GL	https://approvalfinder.dnvgl.com/	19910-11 HH
LR	http://www.lr.org/en	08/20033
GL-SW		19910-11 HH
RINA	http://www.rina.org/en	ELE001320XG

Bus coupler - IL ETH BK DI8 DO4 2TX-PAC - 2703981

Approvals

UL Recognized		http://database.ul.com/cgi-bin/XYV/template/LISEXT/1FRAME/index.htm	FILE E 140324
cUL Recognized		http://database.ul.com/cgi-bin/XYV/template/LISEXT/1FRAME/index.htm	FILE E 140324
EAC			EAC-Zulassung
cULus Recognized			
GL			

Accessories

Accessories

Connector set

Connector set - IL BKDIO-PLSET - 2878599



Connector set, for Inline bus coupler with I/Os mounted in rows

---

Data cable by the meter

Network cable - FL CAT5 HEAVY - 2744814



CAT5-SF/UTP cable (J-02YS(ST)C HP 2 x 2 x 24 AWG), heavy-duty installation cable, 2 x 2 x 0.22 mm², solid conductor, shielded, outer sheath: 7.8 mm diameter, inner sheath: 5.75 mm ± 0.15 mm diameter

Bus coupler - IL ETH BK DI8 DO4 2TX-PAC - 2703981

Accessories

Installation cable - FL CAT5 FLEX - 2744830



By the meter, Installation cable, Ethernet CAT5 (100 Mbps), shielded, PUR halogen-free, water blue RAL 5021, 4-wire (2x2xAWG26/7; SF/UTP), color single wire: white/orange-orange, white/green-green, cable length: Free entry (1.0 ... 1000.0 m)

Data plug

Assembly tool - FL CRIMPTOOL - 2744869



Crimping pliers, for assembling the RJ45 plugs FL PLUG RJ45..., for assembly on site

End block

End clamp - CLIPFIX 35 - 3022218



Quick mounting end clamp for NS 35/7,5 DIN rail or NS 35/15 DIN rail, with marking option, width: 9.5 mm, color: gray

End clamp - E/UK - 1201442



End clamp, width: 9.5 mm, height: 35.3 mm, material: PA, length: 50.5 mm, Mounting on a DIN rail NS 32 or NS 35, color: gray

Labeling panel

Bus coupler - IL ETH BK DI8 DO4 2TX-PAC - 2703981

Accessories

Labeling field - IB IL FIELD 8 - 2727515



Labeling field, width: 48.8 mm

Labeling field - IB IL FIELD 2 - 2727501



Labeling field, width: 12.2 mm

Plug

RJ45 connector - FL PLUG RJ45 GR/2 - 2744856



RJ45 connector, shielded, with bend protection sleeve, 2 pieces, gray for straight cables, for assembly on site. For connections that are not crossed, it is recommended that you use the connector set with gray bend protection sleeve.

RJ45 connector - FL PLUG RJ45 GN/2 - 2744571



RJ45 connector, shielded, with bend protection sleeve, 2 pieces, green for crossed cables, for assembly on site. For connections that are crossed, it is recommended that the connector set with green bend protection sleeves is used.

Terminal marking

Insert strip - ESL 62X46 - 0809502



Insert strip, Sheet, white, unlabeled, can be labeled with: Office printing systems: Laser printer, mounting type: insert, lettering field size: 62 x 46 mm, Number of individual labels: 120

Bus coupler - IL ETH BK DI8 DO4 2TX-PAC - 2703981

Accessories

Insert strip - ESL 62X10 - 0809492



Insert strip, Sheet, white, unlabeled, can be labeled with: Office printing systems: Laser printer, mounting type: insert, lettering field size: 62 x 10 mm, Number of individual labels: 72

Software - IPASSIGN - 2701094



IPAssign is an easy to use tool for setting the IP address of devices which rely on BOOTP. No installation or administrative rights are required to use IPAssign.

This product is free and only available from the "Downloads" tab.

Phoenix Contact 2021 © - all rights reserved
http://www.phoenixcontact.com