DIN rail connector - MSTBVK 2,5/16-G-5,08 - 1788868

Please be informed that the data shown in this PDF Document is generated from our Online Catalog. Please find the complete data in the user's documentation. Our General Terms of Use for Downloads are valid (http://phoenixcontact.com/download)



The figure shows a 10-position version of the product

DIN rail connector, nominal current: 12 A, rated voltage (III/2): 320 V, Nominal cross section: 2.5 mm², number of positions: 16, pitch: 5.08 mm, connection method: Screw connection with tension sleeve, color: green, contact surface: Tin, mounting: DIN rail

Your advantages

- Direct plug-in block for mounting on NS 15 DIN rail
- Can be combined with the MSTB 2,5 range
- Well-known connection principle allows worldwide use



Key Commercial Data

Packing unit	1 pc
Minimum order quantity	50 pc
GTIN	4 017918 043926
GTIN	4017918043926
Weight per Piece (excluding packing)	39.870 g
Custom tariff number	85366990
Country of origin	Germany

Technical data

Dimensions

Length [l]	27.21 mm
Width [w]	82.72 mm
Height [h]	29.2 mm
Pitch	5.08 mm

DIN rail connector - MSTBVK 2,5/16-G-5,08 - 1788868

Technical data

Dimensions

Dimension a	76.2 mm

General

Range of articles	MSTBVK 2,5/..-G
Number of positions	16
Connection method	Screw connection with tension sleeve
Insulating material group	I
Rated surge voltage (III/3)	4 kV
Rated surge voltage (III/2)	4 kV
Rated surge voltage (II/2)	4 kV
Rated voltage (III/3)	320 V
Rated voltage (III/2)	320 V
Rated voltage (II/2)	630 V
Connection in acc. with standard	EN-VDE
Nominal current I_N	12 A
Nominal cross section	2.5 mm²
Maximum load current	12 A
Insulating material	PA
Flammability rating according to UL 94	V0
Internal cylindrical gage	A3
Stripping length	7 mm
Screw thread	M3
Tightening torque, min	0.5 Nm
Tightening torque max	0.6 Nm

Connection data

Conductor cross section solid min.	0.2 mm²
Conductor cross section solid max.	2.5 mm²
Conductor cross section flexible min.	0.2 mm²
Conductor cross section flexible max.	2.5 mm²
Conductor cross section flexible, with ferrule without plastic sleeve min.	0.25 mm²
Conductor cross section flexible, with ferrule without plastic sleeve max.	2.5 mm²
Conductor cross section flexible, with ferrule with plastic sleeve min.	0.25 mm²
Conductor cross section flexible, with ferrule with plastic sleeve max.	2.5 mm²
Conductor cross section AWG min.	24
Conductor cross section AWG max.	12
2 conductors with same cross section, solid min.	0.2 mm²
2 conductors with same cross section, solid max.	1 mm²

DIN rail connector - MSTBVK 2,5/16-G-5,08 - 1788868

Technical data

Connection data

2 conductors with same cross section, stranded min.	0.2 mm²
2 conductors with same cross section, stranded max.	1.5 mm²
2 conductors with same cross section, stranded, ferrules without plastic sleeve, min.	0.25 mm²
2 conductors with same cross section, stranded, ferrules without plastic sleeve, max.	1 mm²
2 conductors with same cross section, stranded, TWIN ferrules with plastic sleeve, min.	0.5 mm²
2 conductors with same cross section, stranded, TWIN ferrules with plastic sleeve, max.	1.5 mm²
Minimum AWG according to UL/CUL	30
Maximum AWG according to UL/CUL	12

Standards and Regulations

Connection in acc. with standard	EN-VDE
	CSA
Flammability rating according to UL 94	V0

Environmental Product Compliance

REACh SVHC	Lead 7439-92-1
China RoHS	Environmentally Friendly Use Period = 50
	For details about hazardous substances go to tab “Downloads”, Category “Manufacturer's declaration”

Drawings

DIN rail connector - MSTBVK 2,5/16-G-5,08 - 1788868

Diagram

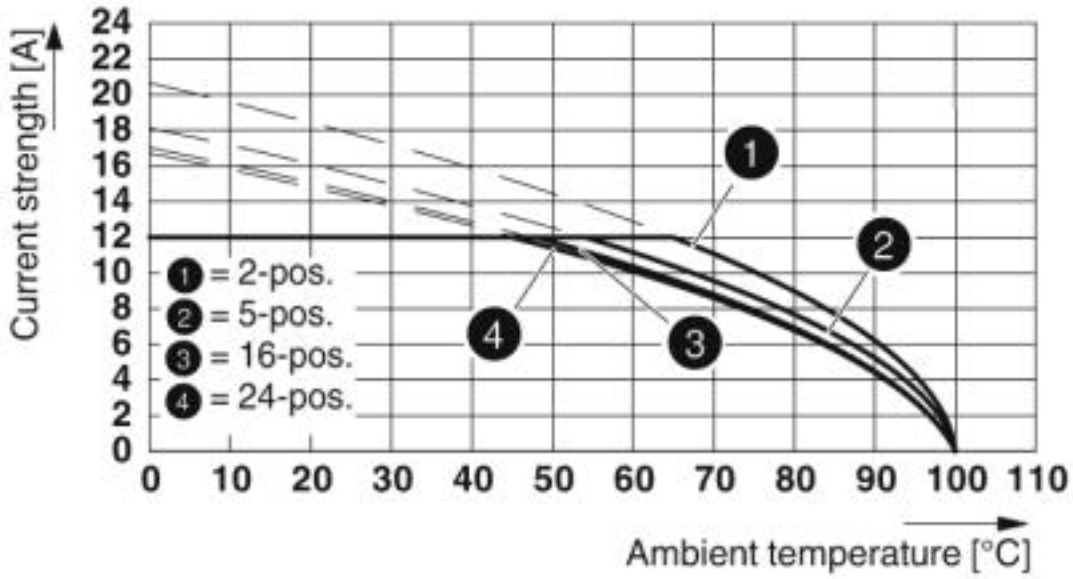

Type: MVSTBR 2,5/...-ST-5,08 with MSTBVK 2,5/...-G-5,08

Dimensional drawing

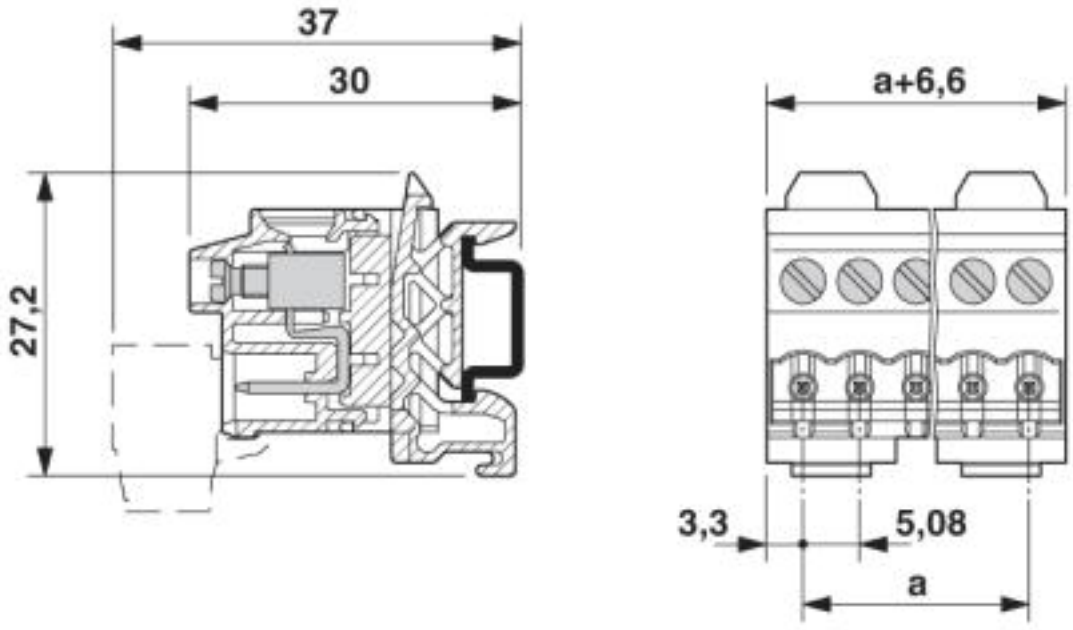

DIN rail connector - MSTBVK 2,5/16-G-5,08 - 1788868

Classifications

eCl@ss

eCl@ss 4.0	27260700
eCl@ss 4.1	27260700
eCl@ss 5.0	27141100
eCl@ss 5.1	27141100
eCl@ss 6.0	27141100
eCl@ss 7.0	27141106
eCl@ss 8.0	27141106
eCl@ss 9.0	27141106

ETIM

ETIM 3.0	EC001121
ETIM 4.0	EC002638
ETIM 5.0	EC001284
ETIM 6.0	EC001284
ETIM 7.0	EC001284

UNSPSC

UNSPSC 6.01	30211810
UNSPSC 7.0901	39121409
UNSPSC 11	39121409
UNSPSC 12.01	39121409
UNSPSC 13.2	39121409

Approvals

Approvals

Approvals

CSA / IECEE CB Scheme / VDE Gutachten mit Fertigungsüberwachung / EAC / cULus Recognized

Ex Approvals

Approval details

DIN rail connector - MSTBVK 2,5/16-G-5,08 - 1788868

Approvals

CSA		http://www.csagroup.org/services-industries/product-listing/	13631

	B	D
Nominal voltage UN	300 V	300 V
Nominal current IN	10 A	10 A
mm²/AWG/kcmil	28-12	28-12

IECEE CB Scheme		http://www.iecee.org/	DE1-60988-B1B2

Nominal voltage UN	250 V
Nominal current IN	12 A
mm²/AWG/kcmil	0.2-2.5

VDE Gutachten mit Fertigungsüberwachung		http://www2.vde.com/de/Institut/Online-Service/VDE-gepruefteProdukte/Seiten/Online-Suche.aspx	40004701

Nominal voltage UN	250 V
Nominal current IN	12 A
mm²/AWG/kcmil	0.2-2.5

EAC		B.01742

cULus Recognized		http://database.ul.com/cgi-bin/XYV/template/LISEXT/1FRAME/index.htm	E60425-19931014

	B	D
Nominal voltage UN	250 V	300 V
Nominal current IN	12 A	10 A
mm²/AWG/kcmil	30-12	30-12

Accessories

Accessories

DIN rail connector - MSTBVK 2,5/16-G-5,08 - 1788868

Accessories

Bridge

Insertion bridge - EBP 2- 5 - 1733169



Coding element

Coding section - CR-MSTB - 1734401



Coding section, inserted into the recess in the header or the inverted plug, red insulating material

Filler plug

Accessories - MSTB-BL - 1755477



Keying cap, for forming sections, plugs onto header pin, green insulating material

Labeled terminal marker

Marker card - SK 5,08/3,8:FORTL.ZAHLEN - 0804293



Marker card, Card, white, labeled, Horizontal: consecutive numbers 1 ... 10, 11 ... 20, etc. up to 91 ... (99)100, mounting type: adhesive, for terminal block width: 5.08 mm, lettering field size: 5.08 x 3.8 mm

Screwdriver tools

DIN rail connector - MSTBVK 2,5/16-G-5,08 - 1788868

Accessories

Screwdriver - SZS 0,6X3,5 - 1205053



Actuation tool, for ST terminal blocks, insulated, also suitable for use as a bladed screwdriver, size: 0.6 x 3.5 x 100 mm, 2-component grip, with non-slip grip

Additional products

Printed-circuit board connector - MSTB 2,5/16-ST-5,08 - 1757158



PCB connector, nominal current: 12 A, rated voltage (III/2): 320 V, Nominal cross section: 2.5 mm², number of positions: 16, pitch: 5.08 mm, connection method: Screw connection with tension sleeve, color: green, contact surface: Tin

Printed-circuit board connector - MSTB 2,5/16-STZ-5,08 - 1764248



PCB connector, nominal current: 12 A, rated voltage (III/2): 320 V, Nominal cross section: 2.5 mm², number of positions: 16, pitch: 5.08 mm, connection method: Screw connection with tension sleeve, color: green, contact surface: Tin

Printed-circuit board connector - MSTBP 2,5/16-ST-5,08 - 1769159



PCB connector, nominal current: 12 A, rated voltage (III/2): 320 V, Nominal cross section: 2.5 mm², number of positions: 16, pitch: 5.08 mm, connection method: Screw connection with tension sleeve, color: green, contact surface: Tin

Printed-circuit board connector - SMSTB 2,5/16-ST-5,08 - 1826429



PCB connector, nominal current: 12 A, rated voltage (III/2): 320 V, Nominal cross section: 2.5 mm², number of positions: 16, pitch: 5.08 mm, connection method: Screw connection with tension sleeve, color: green, contact surface: Tin

DIN rail connector - MSTBVK 2,5/16-G-5,08 - 1788868

Accessories

Printed-circuit board connector - MVSTBR 2,5/16-ST-5,08 - 1792388



PCB connector, nominal current: 12 A, rated voltage (III/2): 320 V, Nominal cross section: 2.5 mm², number of positions: 16, pitch: 5.08 mm, connection method: Screw connection with tension sleeve, color: green, contact surface: Tin

Printed-circuit board connector - MVSTBW 2,5/16-ST-5,08 - 1792896



PCB connector, nominal current: 12 A, rated voltage (III/2): 320 V, Nominal cross section: 2.5 mm², number of positions: 16, pitch: 5.08 mm, connection method: Screw connection with tension sleeve, color: green, contact surface: Tin

Printed-circuit board connector - FRONT-MSTB 2,5/16-ST-5,08 - 1777426



PCB connector, nominal current: 12 A, rated voltage (III/2): 320 V, Nominal cross section: 2.5 mm², number of positions: 16, pitch: 5.08 mm, connection method: Front screw connection, color: green, contact surface: Tin

Printed-circuit board connector - FKC 2,5/16-ST-5,08 - 1873197



PCB connector, nominal current: 12 A, rated voltage (III/2): 320 V, Nominal cross section: 2.5 mm², number of positions: 16, pitch: 5.08 mm, connection method: Push-in spring connection, color: green, contact surface: Tin

Printed-circuit board connector - FKCVR 2,5/16-ST-5,08 - 1874099



PCB connector, nominal current: 12 A, rated voltage (III/2): 320 V, Nominal cross section: 2.5 mm², number of positions: 16, pitch: 5.08 mm, connection method: Push-in spring connection, color: green, contact surface: Tin

DIN rail connector - MSTBVK 2,5/16-G-5,08 - 1788868

Accessories

Printed-circuit board connector - QC 1/16-ST-5,08 - 1883844



PCB connector, nominal current: 10 A, rated voltage (III/2): 630 V, Nominal cross section: 1 mm², number of positions: 16, pitch: 5.08 mm, connection method: Displacement connection, color: green, contact surface: Tin

---

Printed-circuit board connector - MSTBC 2,5/16-ST-5,08 - 1808955



PCB connector, nominal current: 12 A, rated voltage (III/2): 320 V, Nominal cross section: 2.5 mm², number of positions: 16, pitch: 5.08 mm, connection method: Crimp connection, color: green, Corresponding female crimp contacts with current [A] and conductor cross section range [mm²] data: 10A/MSTBC-MT 0,5-1,0 (3190564); 10A/MSTBC-MT 0,5-1,0 BA (3190645); 12A/MSTBC-MT 1,5-2,5 (3190551); 12A/MSTBC-MT 1,5-2,5 BA (3190658). BA = Bandkontakte

---

Printed-circuit board connector - MSTBC 2,5/16-STZ-5,08 - 1809640



PCB connector, nominal current: 12 A, rated voltage (III/2): 320 V, Nominal cross section: 2.5 mm², number of positions: 16, pitch: 5.08 mm, connection method: Crimp connection, color: green, Corresponding female crimp contacts with current [A] and conductor cross section range [mm²] data: 10A/MSTBC-MT 0,5-1,0 (3190564); 10A/MSTBC-MT 0,5-1,0 BA (3190645); 12A/MSTBC-MT 1,5-2,5 (3190551); 12A/MSTBC-MT 1,5-2,5 BA (3190658). BA = Bandkontakte

---

Phoenix Contact 2019 © - all rights reserved
http://www.phoenixcontact.com