System connection - PLC-V8/FLK14/OUT - 2295554

Please be informed that the data shown in this PDF Document is generated from our Online Catalog. Please find the complete data in the user's documentation. Our General Terms of Use for Downloads are valid (http://phoenixcontact.com/download)

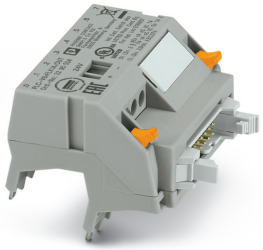

V8 adapter for 8 x PLC-INTERFACE (6.2 mm), controller: PLC system cabling of output cards, connection 1: Screw connection 1x, connection 2: IDC/FLK pin strip 1x 14-position, connection 3: Plug connection (Can be snapped onto 8x PLC-INTERFACE terminals), number of channels: 8, control logic: positive switching

RoHS

Key Commercial Data

Packing unit	1 pc
GTIN	4 017918 189143
GTIN	4017918189143
Weight per Piece (excluding packing)	42.400 g
Custom tariff number	85366990
Country of origin	Germany

Technical data

Dimensions

Width	50 mm
Height	39 mm
Depth	56 mm

Ambient conditions

Ambient temperature (operation)	-40 °C ... 70 °C
Ambient temperature (storage/transport)	-40 °C ... 70 °C
Degree of protection	IP20

General

Max. permissible operating voltage	30 V DC
Nominal voltage U_N	24 V DC

System connection - PLC-V8/FLK14/OUT - 2295554

Technical data

General

Max. perm. current (per branch)	1 A (per signal path)
Max. permissible current (separate power supply)	3 A
Number of positions	14
Status display	Green LED
Mounting position	any

Connection data

Connection name	Supply
Connection in acc. with standard	IEC / EN
Connection method	Screw connection
Stripping length	8 mm
Screw thread	M3
Number of connections	1
Conductor cross section solid	0.2 mm² ... 4 mm²
Conductor cross section flexible	0.2 mm² ... 2.5 mm²
Conductor cross section AWG	24 ... 12

Connection data 2

Connection name	Controller level
Connection method	IDC/FLK pin strip
Number of connections	1
Number of positions	14
Pitch	2.54 mm

Connection data 3

Connection name	Field level
Connection method	Plug connection
Note	Can be snapped onto 8x PLC-INTERFACE terminals

Supported controller

Controller	SIEMENS S7-1500
- suitable I/O card	6ES7522-1BH00-0AB0
	6ES7522-1BH01-0AB0
	6ES7522-1BL00-0AB0
	6ES7522-1BL01-0AB0
Controller	SIEMENS S7-400
- suitable I/O card	6ES7 422-1BL00-0AA0
	6ES7 422-7BL00-0AB0
Controller	ALLEN-BRADLEY ControlLogix

System connection - PLC-V8/FLK14/OUT - 2295554

Technical data

Supported controller

- suitable I/O card	1756-OB32
	1756-OB16E
Controller	ALLEN-BRADLEY PLC 5
- suitable I/O card	1771 OBN
Controller	ALLEN-BRADLEY SLC 500
- suitable I/O card	1746 OB 32
Controller	HONEYWELL Experion PKS C200
- suitable I/O card	TC-ODD 321
Controller	MITSUBISHI MELSEC Q
- suitable I/O card	QY81P
	QY82P
Controller	SIEMENS S7-300 / ET 200 M
- suitable I/O card	CPU 313C-2DP
	CPU 314C-2DP
	CPU 314C-2PtP
	6ES7 322-1BH01-0AA0
	6ES7 322-1BL00-0AA0
	6ES7 323-1BH01-0AA0
	6ES7 323-1BL00-0AA0
	CPU 313C
	CPU 313C-2PtP
Controller	ABB S800 I/O
- suitable I/O card	DO810
	DO840
Controller	Emerson DeltaV
- suitable I/O card	VE4002S1T1B3
	VE4002S1T2B3
	VE4002S1T2B3 Series 2
	VE4002S1T2B6
Controller	GE-FANUC RX3i
- suitable I/O card	IC694MDL754
Controller	MITSUBISHI MELSEC L
- suitable I/O card	LY41PT1P
	LY42PT1P

Standards and Regulations

Connection in acc. with standard	CUL
Standards/regulations	IEC 60664

System connection - PLC-V8/FLK14/OUT - 2295554

Technical data

Standards and Regulations

	DIN EN 50178
Rated insulation voltage	50 V
Rated surge voltage	0.5 kV (Functional insulation)
Pollution degree	2
Overvoltage category	II

Environmental Product Compliance

REACh SVHC	Lead 7439-92-1
China RoHS	Environmentally Friendly Use Period = 50 years
	For details about hazardous substances go to tab “Downloads”, Category “Manufacturer's declaration”

Drawings

Circuit diagram

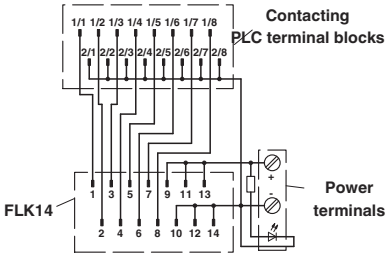

PLC-V8/FLK14/OUT connection scheme

Schematic diagram

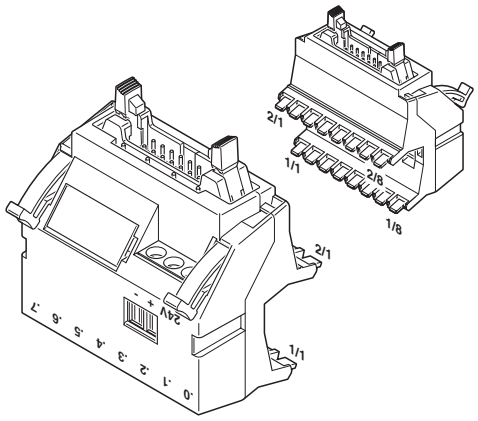

System connection - PLC-V8/FLK14/OUT - 2295554

Dimensional drawing



Classifications

eCl@ss

eCl@ss 10.0.1	27141152
eCl@ss 11.0	27141152
eCl@ss 4.0	27250300
eCl@ss 4.1	27250300
eCl@ss 5.0	27242700
eCl@ss 5.1	27242700
eCl@ss 6.0	27242200
eCl@ss 7.0	27141152
eCl@ss 8.0	27141152
eCl@ss 9.0	27141152

ETIM

ETIM 5.0	EC002780
ETIM 6.0	EC002780
ETIM 7.0	EC002780

UNSPSC

UNSPSC 6.01	30211824
UNSPSC 7.0901	39121402

System connection - PLC-V8/FLK14/OUT - 2295554

Classifications

UNSPSC

UNSPSC 11	39121402
UNSPSC 12.01	39121402
UNSPSC 13.2	39121432
UNSPSC 18.0	39121432
UNSPSC 19.0	39121432
UNSPSC 20.0	39121432
UNSPSC 21.0	39121432

Approvals

Approvals

Approvals

PRS / UL Listed / UL Recognized / cUL Recognized / cUL Listed / DNV GL / cULus Recognized / cULus Listed

Ex Approvals

UL Listed / cUL Listed / cULus Listed

Approval details

PRS	http://www.prs.pl/	TE/2109/880590/16

UL Listed	http://database.ul.com/cgi-bin/XYV/template/LISEXT/1FRAME/index.htm	FILE E 172140

UL Recognized	http://database.ul.com/cgi-bin/XYV/template/LISEXT/1FRAME/index.htm	FILE E 238705

Nominal voltage UN	24 V
Nominal current IN	1 A

System connection - PLC-V8/FLK14/OUT - 2295554

Approvals

cUL Recognized		http://database.ul.com/cgi-bin/XYV/template/LISEXT/1FRAME/index.htm	FILE E 238705

Nominal voltage UN	24 V
Nominal current IN	1 A

cUL Listed		http://database.ul.com/cgi-bin/XYV/template/LISEXT/1FRAME/index.htm	FILE E 172140

DNV GL		https://approvalfinder.dnvgl.com/	TAE0000196-03

cULus Recognized	

cULus Listed	

Phoenix Contact 2021 © - all rights reserved
http://www.phoenixcontact.com