Safety relays - PSR-SCP- 24DC/ESP4/2X1/1X2 - 2981020

Please be informed that the data shown in this PDF Document is generated from our Online Catalog. Please find the complete data in the user's documentation. Our General Terms of Use for Downloads are valid (http://phoenixcontact.com/download)



Safety relay for SIL 3 high and low-demand applications, also approved according to EN 50156, Germanischer Lloyd, and EN ISO 13849, emergency stop and safety door monitoring, single-channel, 2 enabling current paths, 1 alarm contact, plug-in screw terminal blocks, width: 22.5 mm

Your advantages

- Up to Cat. 4/PL e according to ISO 13849-1, SILCL 3 according to IEC 62061, SIL 3 according to IEC 61508
- Single-channel control
- Safe isolation
- With inrush current reduction, therefore suitable for coupling to failsafe controllers (PSR-ESP4)

Key Commercial Data

Packing unit	1 pc
GTIN	4 017918 911065
GTIN	4017918911065
Weight per Piece (excluding packing)	240.000 g
Custom tariff number	85371098
Country of origin	Germany

Technical data

Note

Utilization restriction	EMC: class A product, see manufacturer's declaration in the download area

Dimensions

Width	22.5 mm
Height	99 mm

Safety relays - PSR-SCP- 24DC/ESP4/2X1/1X2 - 2981020

Technical data

Dimensions

Depth	114.5 mm

Ambient conditions

Ambient temperature (operation)	-20 °C ... 55 °C
Ambient temperature (storage/transport)	-40 °C ... 70 °C
Max. permissible relative humidity (operation)	75 % (on average, 85% infrequently, non-condensing)
Max. permissible humidity (storage/transport)	75 % (on average, 85% infrequently, non-condensing)
Maximum altitude	≤ 2000 m (Above sea level)

Input data

Rated control circuit supply voltage U_S	24 V DC -15 % / +10 %
Rated control supply current I_S	typ. 50 mA DC
Power consumption at U_S	1.2 W
Inrush current	1 A (Δt <10 ms at U_s)
Typical response time	60 ms (Automatic/manual start)
Typical release time	20 ms
Recovery time	approx. 1 s
Operating voltage display	Green LED
Status display	Green LED
Protective circuit	Surge protection Suppressor diode, 33 V (A1 - A2, Y2 - A2)
	Reverse polarity protection
Filter time	max. 3 ms (Test pulse duration)

Output data

Contact type	2 enabling current paths
	1 signaling current path (type B according to EN 50205)
Contact material	$AgSnO_2$, gold-flashed
Maximum switching voltage	250 V AC/DC (Observe the load curve)
Minimum switching voltage	10 V
Limiting continuous current	6 A (N/O contact/N/C contact, high demand)
	4 A (N/O contact, for low-demand applications)
Maximum inrush current	6 A
Inrush current, minimum	10 mA
Sq. Total current	72 A^2 (observe derating)
Interrupting rating (ohmic load) max.	144 W (24 V DC, τ = 0 ms)
	200 W (48 V DC, τ = 0 ms)
	77 W (110 V DC, τ = 0 ms)
	70 W (220 V DC, τ = 0 ms)

Safety relays - PSR-SCP- 24DC/ESP4/2X1/1X2 - 2981020

Technical data

Output data

	1500 VA (250 V AC, τ = 0 ms)
Maximum interrupting rating (inductive load)	42 W (24 V DC, τ = 40 ms)
	40 W (48 V DC, τ = 40 ms)
	35 W (110 V DC, τ = 40 ms)
	33 W (220 V DC, τ = 40 ms)
Switching capacity min.	0.2 W
Mechanical service life	approx. 10^7 cycles
Switching capacity (360/h cycles)	5 A (24 V (DC13))
	5 A (230 V (AC 15))
Output fuse	6 A gL/gG NEOZED (High demand)
	4 A gL/gG NEOZED (Low demand)

General

Relay type	Electromechanical relay with forcibly guided contacts in accordance with EN 50205
Nominal operating mode	100% operating factor
Net weight	168.97 g
Mounting position	On horizontal and vertical DIN rail
Mounting type	DIN rail mounting
Degree of protection	IP20
Min. degree of protection of inst. location	IP54
Housing material	PBT
Housing color	yellow

Connection data

Connection method	Screw connection
pluggable	Yes
Conductor cross section solid min.	0.2 mm²
Conductor cross section solid max.	2.5 mm²
Conductor cross section flexible min.	0.2 mm²
Conductor cross section flexible max.	2.5 mm²
Conductor cross section AWG min.	24
Conductor cross section AWG max.	12
Stripping length	7 mm
Screw thread	M3

Safety-related characteristic data

Stop category	0
Designation	IEC 61508 - High demand

Safety relays - PSR-SCP- 24DC/ESP4/2X1/1X2 - 2981020

Technical data

Safety-related characteristic data

Safety Integrity Level (SIL)	3
Designation	IEC 61508 - Low demand
Safety Integrity Level (SIL)	3
Designation	EN ISO 13849
Performance level (PL)	e
Category	4
Designation	EN 62061
Safety Integrity Level Claim Limit (SIL CL)	3

Standards and Regulations

Designation	Air clearances and creepage distances between the power circuits
Standards/regulations	DIN EN 50178/VDE 0160
Rated insulation voltage	250 V
Rated surge voltage/insulation	6 kV / Safe isolation, increased insulation
	Basic insulation 4 kV between all current paths and housing
Degree of pollution	2
Overvoltage category	III
Shock	15g
Vibration (operation)	10 Hz ... 150 Hz, 2g
Conformance	CE-compliant

Environmental Product Compliance

REACh SVHC	Lead 7439-92-1
China RoHS	Environmentally Friendly Use Period = 50 years
	For details about hazardous substances go to tab “Downloads”, Category “Manufacturer's declaration”

Drawings

Safety relays - PSR-SCP- 24DC/ESP4/2X1/1X2 - 2981020

Circuit diagram

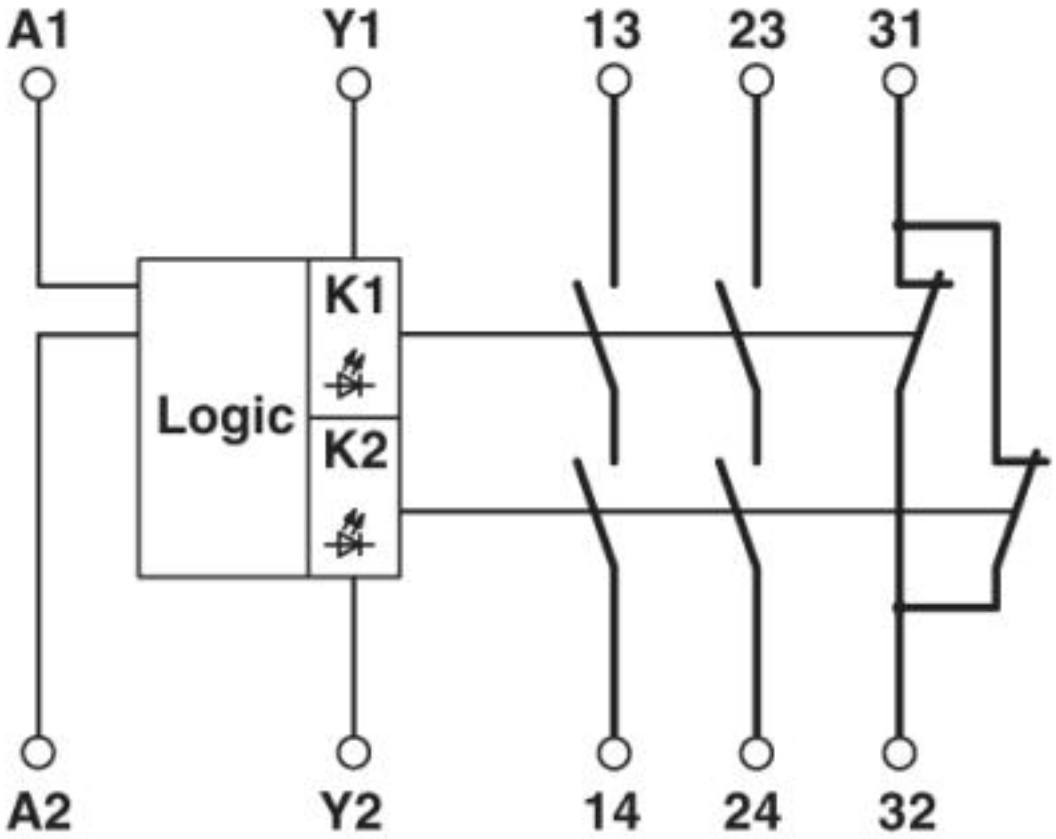

Classifications

eCl@ss

eCl@ss 10.0.1	27371819
eCl@ss 4.0	40020600
eCl@ss 4.1	40020600
eCl@ss 5.0	27371900
eCl@ss 5.1	27371900
eCl@ss 6.0	27371800
eCl@ss 7.0	27371819
eCl@ss 8.0	27371819
eCl@ss 9.0	27371819

ETIM

ETIM 2.0	EC001449
ETIM 3.0	EC001449

Safety relays - PSR-SCP- 24DC/ESP4/2X1/1X2 - 2981020

Classifications

ETIM

ETIM 4.0	EC001449
ETIM 5.0	EC001449
ETIM 6.0	EC001449
ETIM 7.0	EC001449

UNSPSC

UNSPSC 6.01	30211901
UNSPSC 7.0901	39121501
UNSPSC 11	39121501
UNSPSC 12.01	39121501
UNSPSC 13.2	39121501
UNSPSC 18.0	39122205
UNSPSC 19.0	39122205
UNSPSC 20.0	39122205
UNSPSC 21.0	39122205

Approvals

Approvals

Approvals

DNV GL / Functional Safety / Functional Safety / UL Listed / cUL Listed / Functional Safety / EAC / EAC / cULus Listed

Ex Approvals

Approval details

DNV GL		https://approvalfinder.dnvgl.com/	TAA00000K4
Functional Safety			01/205/0763.01/1.50

Safety relays - PSR-SCP- 24DC/ESP4/2X1/1X2 - 2981020

Approvals

Functional Safety			968/EZ 406.02/15
UL Listed		http://database.ul.com/cgi-bin/XYV/template/LISEXT/1FRAME/index.htm	FILE E 140324
cUL Listed		http://database.ul.com/cgi-bin/XYV/template/LISEXT/1FRAME/index.htm	FILE E 140324
Functional Safety			968/EZ 406.02/15
EAC			EAC-Zulassung
EAC			RU C-DE.A*30.B.01082
cULus Listed			

Phoenix Contact 2020 © - all rights reserved
http://www.phoenixcontact.com