Safety relays - PSR-SCP- 24UC/ESAM4/8X1/1X2 - 2963912

Please be informed that the data shown in this PDF Document is generated from our Online Catalog. Please find the complete data in the user's documentation. Our General Terms of Use for Downloads are valid (http://phoenixcontact.com/download)



Safety relay for emergency stop and safety door monitoring up to SIL 3 or Cat. 4, PL e according to EN ISO 13849, single- or two-channel operation, 8 enabling current paths, U_S = 24 V AC/DC, plug-in screw terminal block

Your advantages

- Up to Cat.4/PL e according to ISO 13849-1, SILCL 3 according to IEC 62061
- Manually monitored and automatic activation in a single device
- Single and two-channel control
- 8 enabling current paths, 1 signaling current path

Key Commercial Data

Packing unit	1 pc
GTIN	4 017918 899707
GTIN	4017918899707
Weight per Piece (excluding packing)	440.000 g
Custom tariff number	85371098
Country of origin	Germany

Technical data

Note

Utilization restriction	EMC: class A product, see manufacturer's declaration in the download area

Dimensions

Width	45 mm
Height	99 mm

Safety relays - PSR-SCP- 24UC/ESAM4/8X1/1X2 - 2963912

Technical data

Dimensions

Depth	114.5 mm

Ambient conditions

Ambient temperature (operation)	-20 °C ... 55 °C (observe derating)
Ambient temperature (storage/transport)	-40 °C ... 70 °C
Max. permissible relative humidity (operation)	75 % (on average, 85% infrequently, non-condensing)
Max. permissible humidity (storage/transport)	75 % (on average, 85% infrequently, non-condensing)
Maximum altitude	≤ 2000 m (Above sea level)

Input data

Rated control circuit supply voltage U_S	24 V AC/DC -15 % / +10 %
Rated control supply current I_S	typ. 177 mA AC
	typ. 93 mA DC
Power consumption at U_S	typ. 4.25 W (AC)
	typ. 2.23 W (DC)
Inrush current	2 A (Δt = 10 ms at U_s)
	< 60 mA (with U_s/I_x to S10)
	< 110 mA (with U_s/I_x to S12)
	> -110 mA (with U_s/I_x to S22)
	< 60 mA (with U_s/I_x to S34)
	< 60 mA (with U_s/I_x to S35)
Current consumption	< 50 mA (with U_s/I_x to S10)
	< 50 mA (with U_s/I_x to S12)
	> -50 mA (with U_s/I_x to S22)
	0 mA (with U_s/I_x to S34)
	0 mA (with U_s/I_x to S35)
Voltage at input/start and feedback circuit	24 V DC -15 % / +10 %
Typical response time	< 380 ms (automatic start)
	< 60 ms (manual start)
Typ. starting time with U_s	< 500 ms (when controlled via A1)
Typical release time	< 20 ms (when controlled via S11/S12 and S21/S22)
	< 50 ms (when controlled via A1)
Concurrence input 1/2	∞
Recovery time	< 1 s
Operating voltage display	1 x green LED
Status display	2 x green LEDs
Protective circuit	Surge protection Suppressor diode and varistors
Maximum switching frequency	0.5 Hz

Safety relays - PSR-SCP- 24UC/ESAM4/8X1/1X2 - 2963912

Technical data

Input data

Max. permissible overall conductor resistance	approx. 11 Ω (Input and start circuits at U_S)
Filter time	2 ms (at A1 in the event of voltage dips at U_s)
	max. 1.5 ms (at S10, S12; test pulse width)
	7.5 ms (at S10, S12; test pulse rate)
	Test pulse rate = 5 x Test pulse width

Output data

Contact type	8 enabling current paths
	1 signaling current path
Contact material	$AgSnO_2$
Maximum switching voltage	250 V AC/DC (Observe the load curve)
Minimum switching voltage	5 V AC/DC
Limiting continuous current	6 A (N/O contact, pay attention to the derating)
	6 A (N/C contact)
Maximum inrush current	20 A (Δt # 100 ms)
Inrush current, minimum	10 mA
Sq. Total current	50 A^2 (observe derating)
Interrupting rating (ohmic load) max.	144 W (24 V DC, τ = 0 ms)
	288 W (48 V DC, τ = 0 ms)
	110 W (110 V DC, τ = 0 ms)
	88 W (220 V DC, τ = 0 ms)
	1500 VA (250 V AC, τ = 0 ms)
Maximum interrupting rating (inductive load)	42 W (24 V DC, τ = 40 ms)
	42 W (48 V DC, τ = 40 ms)
	42 W (110 V DC, τ = 40 ms)
	42 W (220 V DC, τ = 40 ms)
Switching capacity min.	50 mW
Mechanical service life	10x 10^6 cycles
Switching capacity (360/h cycles)	4 A (24 V DC)
	4 A (230 V AC)
Output fuse	10 A gL/gG (N/O contact)
	6 A gL/gG (N/C contact)

General

Relay type	Electromechanical relay with forcibly guided contacts in accordance with IEC/EN 61810-3 (EN 50205)
Nominal operating mode	100% operating factor
Net weight	429 g

Safety relays - PSR-SCP- 24UC/ESAM4/8X1/1X2 - 2963912

Technical data

General

Mounting position	any
Mounting type	DIN rail mounting
Degree of protection	IP20
Min. degree of protection of inst. location	IP54
Housing material	PBT
Housing color	yellow

Connection data

Connection method	Screw connection
pluggable	Yes
Conductor cross section solid min.	0.2 mm²
Conductor cross section solid max.	2.5 mm²
Conductor cross section flexible min.	0.2 mm²
Conductor cross section flexible max.	2.5 mm²
Conductor cross section AWG min.	24
Conductor cross section AWG max.	12
Stripping length	7 mm
Screw thread	M3

Safety-related characteristic data

Stop category	0
Designation	IEC 61508 - High demand
Safety Integrity Level (SIL)	3
Designation	IEC 61508 - Low demand
Safety Integrity Level (SIL)	3
Designation	EN ISO 13849
Performance level (PL)	e
Category	4
Designation	EN 62061
Safety Integrity Level Claim Limit (SIL CL)	3

Standards and Regulations

Designation	Air clearances and creepage distances between the power circuits
Standards/regulations	DIN EN 50178/VDE 0160
Rated insulation voltage	250 V AC
Rated surge voltage/insulation	Basic insulation 4 kV: between all current paths and housing Safe isolation, reinforced insulation 6 kV: between A1/A2 and 63/64, 73/74, 83/84 between S10/S11/S12/S33/S34/S35 and 63/64, 73/74, 83/84 between 63/64, 73/74, 83/84 among one another

Safety relays - PSR-SCP- 24UC/ESAM4/8X1/1X2 - 2963912

Technical data

Standards and Regulations

Degree of pollution	2
Overvoltage category	III
Shock	15g
Vibration (operation)	10 Hz ... 150 Hz, 2g
Conformance	CE-compliant

Environmental Product Compliance

REACh SVHC	Lead 7439-92-1
China RoHS	Environmentally Friendly Use Period = 50 years
	For details about hazardous substances go to tab “Downloads”, Category “Manufacturer's declaration”

Drawings

Circuit diagram

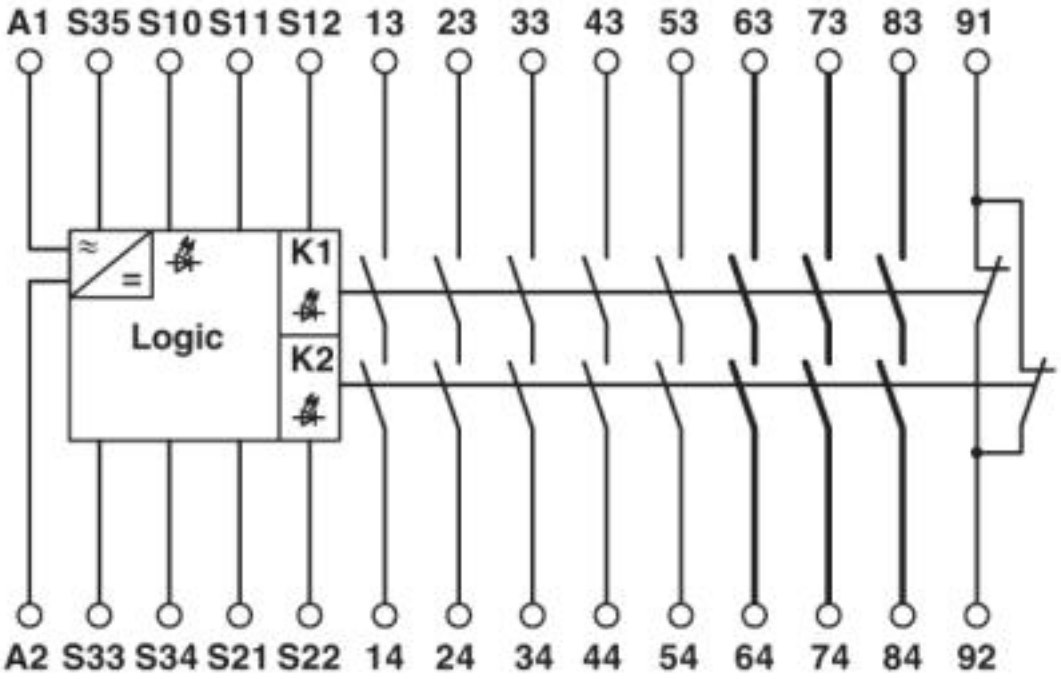

Safety relays - PSR-SCP- 24UC/ESAM4/8X1/1X2 - 2963912

Circuit diagram

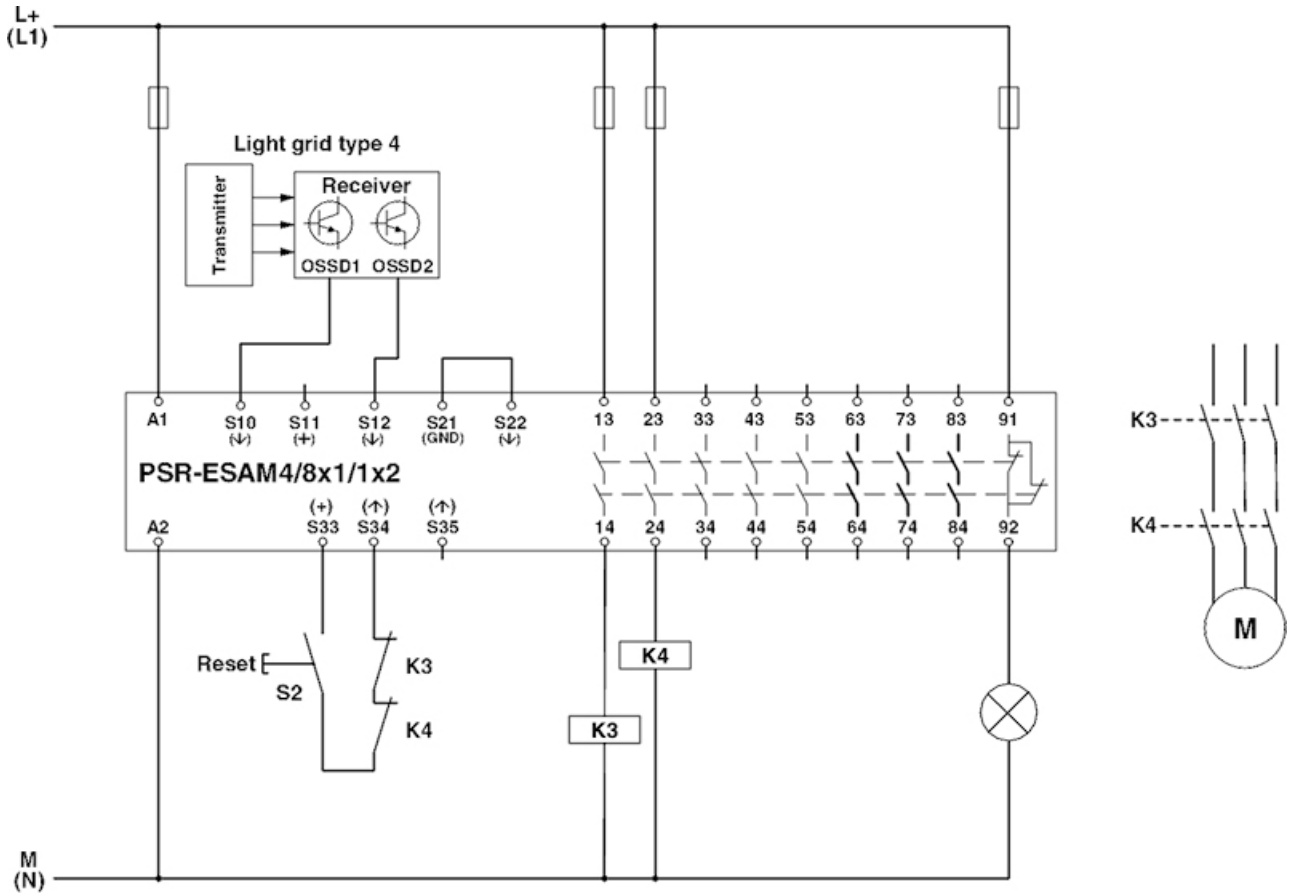

Safety relays - PSR-SCP- 24UC/ESAM4/8X1/1X2 - 2963912

Classifications

eCl@ss

eCl@ss 10.0.1	27371819
eCl@ss 4.0	40020600
eCl@ss 4.1	40020600
eCl@ss 5.0	27371900
eCl@ss 5.1	27371900
eCl@ss 6.0	27371800
eCl@ss 7.0	27371819
eCl@ss 8.0	27371819
eCl@ss 9.0	27371819

ETIM

ETIM 2.0	EC000196
ETIM 3.0	EC001449
ETIM 4.0	EC001449
ETIM 5.0	EC001449
ETIM 6.0	EC001449
ETIM 7.0	EC001449

UNSPSC

UNSPSC 6.01	30211901
UNSPSC 7.0901	39121501
UNSPSC 11	39121501
UNSPSC 12.01	39121501
UNSPSC 13.2	39121501
UNSPSC 18.0	39122205
UNSPSC 19.0	39122205
UNSPSC 20.0	39122205
UNSPSC 21.0	39122205

Approvals

Approvals

Approvals

UL Listed / cUL Listed / Functional Safety / EAC / EAC / cULus Listed

Ex Approvals

Safety relays - PSR-SCP- 24UC/ESAM4/8X1/1X2 - 2963912

Approvals

Approval details

UL Listed		http://database.ul.com/cgi-bin/XYV/template/LISEXT/1FRAME/index.htm	FILE E 140324
cUL Listed		http://database.ul.com/cgi-bin/XYV/template/LISEXT/1FRAME/index.htm	FILE E 140324
Functional Safety			01/205/5363.01/16
EAC			EAC-Zulassung
EAC			RU C-DE.A*30.B.01082
cULus Listed			

Phoenix Contact 2020 © - all rights reserved
http://www.phoenixcontact.com