Safety relays - PSR-SPP- 24DC/ESD/4X1/30 - 2981813

Please be informed that the data shown in this PDF Document is generated from our Online Catalog. Please find the complete data in the user's documentation. Our General Terms of Use for Downloads are valid (http://phoenixcontact.com/download)



Safety relay for emergency stop and safety door monitoring up to SIL 3 or Cat. 4, PL e in accordance with EN ISO 13849, automatic or manual activation, 2 N/O contacts with a fixed dropout delay of 0.1 s ... 30 s, pluggable Push-in terminal block

Your advantages

- Maximum of 3 undelayed and 2 dropout delay contacts
- Manually monitored and automatic activation
- Up to Cat. 3/4 and PL d/e according to ISO 13849-1, SILCL 3 according to IEC 62061, SIL 3 according to IEC 61508
- For emergency stop and safety door monitoring, plus evaluation of light grids
- Protective labels to prevent manipulation of the set time (PSR-ESD-300) or electronic protection against manipulation (PSR-ESD-30)
- Single and two-channel control
- Fixed delay times of 0.1 s ... 300 s

Key Commercial Data

Packing unit	1 pc
GTIN	4 046356 117265
GTIN	4046356117265
Weight per Piece (excluding packing)	20.000 g
Custom tariff number	85371098
Country of origin	Germany

Technical data

Note

Utilization restriction	EMC: class A product, see manufacturer's declaration in the download area

Dimensions

Safety relays - PSR-SPP- 24DC/ESD/4X1/30 - 2981813

Technical data

Dimensions

Width	22.5 mm
Height	112 mm
Depth	114.5 mm

Ambient conditions

Ambient temperature (operation)	-20 °C ... 45 °C
Ambient temperature (storage/transport)	-40 °C ... 70 °C
Max. permissible relative humidity (operation)	75 % (on average, 85% infrequently, non-condensing)
Max. permissible humidity (storage/transport)	75 % (on average, 85% infrequently, non-condensing)
Maximum altitude	≤ 2000 m (Above sea level)

Input data

Nominal input voltage U_N	24 V DC
Input voltage range in reference to U_N	0.85 ... 1.1
Typical input current at U_N	75 mA DC
Voltage at input/start and feedback circuit	approx. 24 V DC
Typical response time	150 ms (Monitored/manual and auto-start)
Typical release time	20 ms (Undelayed contacts)
	100 ms (delayed contacts)
Typical release time range	0.1 s ... 30 s
Recovery time	330 ms (Restart)
	1 s (Electric torque)
Operating voltage display	Green LED
Status display	LED K1/K2 and K3(t)/K4(t), green
Protective circuit	Suppressor diode, 33 V DC
Max. permissible overall conductor resistance	50 Ω (Input and reset circuit at U_N)

Output data

Contact type	4 enabling current paths
Contact material	$AgSnO_2$
Maximum switching voltage	250 V AC/DC
Minimum switching voltage	15 V AC/DC
Limiting continuous current	6 A (N/O contact)
Maximum inrush current	6 A
Inrush current, minimum	25 mA
Sq. Total current	120 A^2 (see to derating)
Interrupting rating (ohmic load) max.	144 W (24 V DC, τ = 0 ms)
	288 W (48 V DC, τ = 0 ms)

Safety relays - PSR-SPP- 24DC/ESD/4X1/30 - 2981813

Technical data

Output data

	90 W (110 V DC, τ = 0 ms)
	88 W (220 V DC, τ = 0 ms)
	1500 VA (250 V AC, τ = 0 ms)
Maximum interrupting rating (inductive load)	42 W (24 V DC, τ = 40 ms)
	33 W (48 V DC, τ = 40 ms)
	25 W (110 V DC, τ = 40 ms)
	23 W (220 V DC, τ = 40 ms)
Switching capacity min.	0.4 W
Mechanical service life	approx. 10^7 cycles
Switching capacity (360/h cycles)	on request
Output fuse	10 A gL/gG NEOZED (N/O contact)

General

Relay type	Electromechanical relay with force-guided contacts in accordance with IEC/EN 61810-3
Nominal operating mode	100% operating factor
Net weight	166.88 g
Mounting position	any
Mounting type	DIN rail mounting
Degree of protection	IP20
Min. degree of protection of inst. location	IP54
Housing material	PBT

Connection data

Connection method	Push-in connection
pluggable	Yes
Conductor cross section solid	0.2 mm² ... 1.5 mm²
Conductor cross section flexible	0.2 mm² ... 1.5 mm²
Conductor cross-section AWG	24 ... 16
Conductor cross-section flexible with ferrule without plastic sleeve	0.25 mm² ... 1.5 mm² (only together with CRIMPFOX 6)
Conductor cross-section flexible with ferrule and plastic sleeve	0.25 mm² ... 1.5 mm² (only together with CRIMPFOX 6)
Stripping length	8 mm

Safety-related characteristic data

Stop category	0
	1
Safety Integrity Level (SIL)	3
Designation	EN ISO 13849
Performance level (PL)	e

Safety relays - PSR-SPP- 24DC/ESD/4X1/30 - 2981813

Technical data

Safety-related characteristic data

Category	4
Safety Integrity Level Claim Limit (SIL CL)	3

Standards and Regulations

Designation	Air clearances and creepage distances between the power circuits
Standards/regulations	DIN EN 60947-1
Rated insulation voltage	250 V
Rated surge voltage/insulation	4 kV / basic insulation
Degree of pollution	2
Overvoltage category	II
Shock	15g
Vibration (operation)	10 Hz ... 150 Hz, 2g

Environmental Product Compliance

REACh SVHC	Lead 7439-92-1
China RoHS	Environmentally Friendly Use Period = 50 years
	For details about hazardous substances go to tab “Downloads”, Category “Manufacturer's declaration”

Drawings

Safety relays - PSR-SPP- 24DC/ESD/4X1/30 - 2981813

Circuit diagram

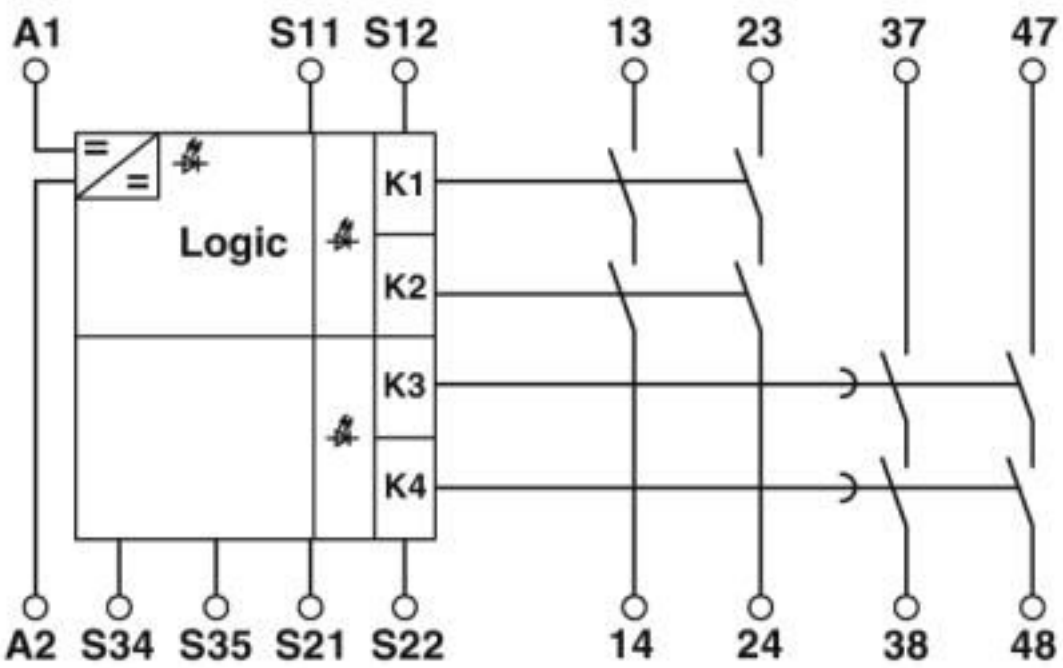

Safety relays - PSR-SPP- 24DC/ESD/4X1/30 - 2981813

Circuit diagram

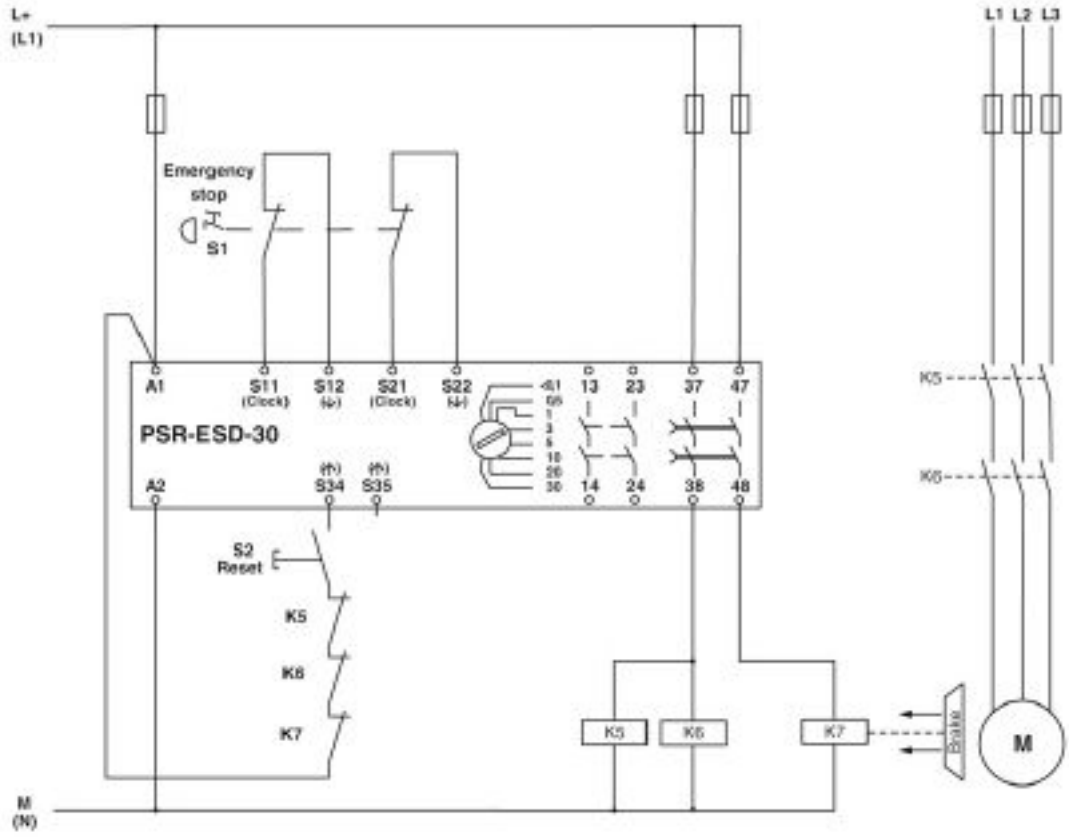

Two-channel emergency stop monitoring

Safety relays - PSR-SPP- 24DC/ESD/4X1/30 - 2981813

Circuit diagram

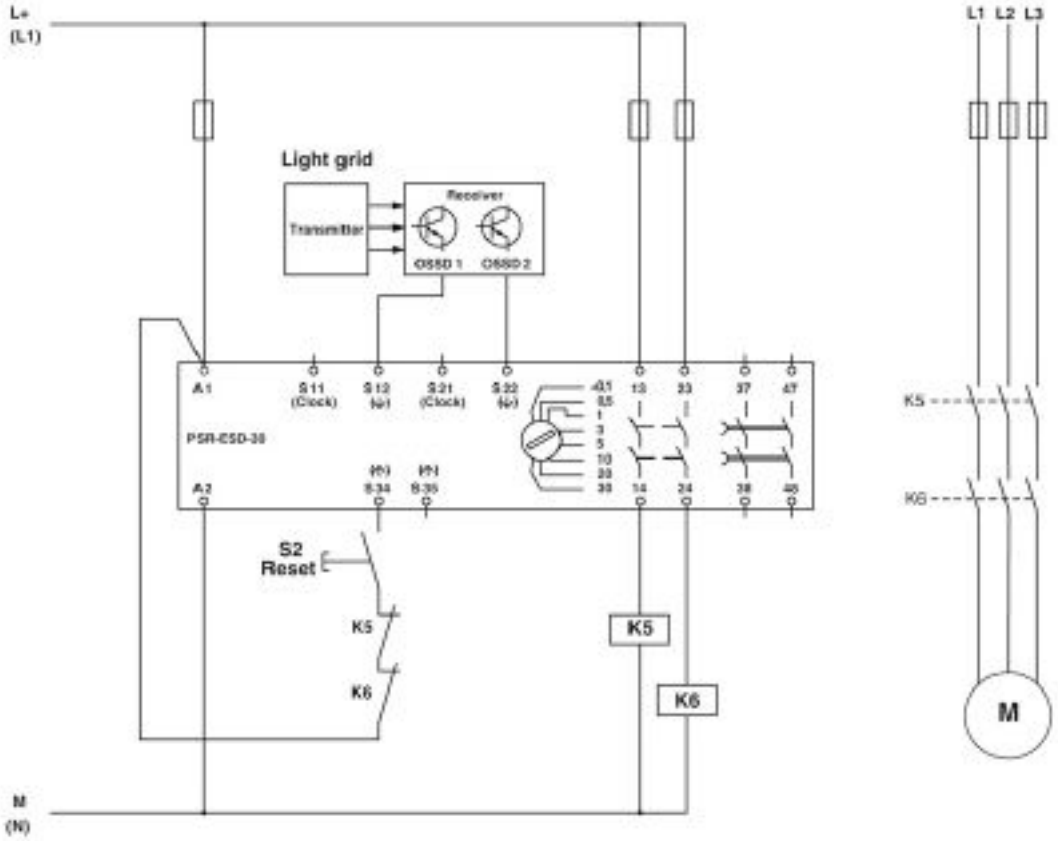

Light grid monitoring

Safety relays - PSR-SPP- 24DC/ESD/4X1/30 - 2981813

Circuit diagram

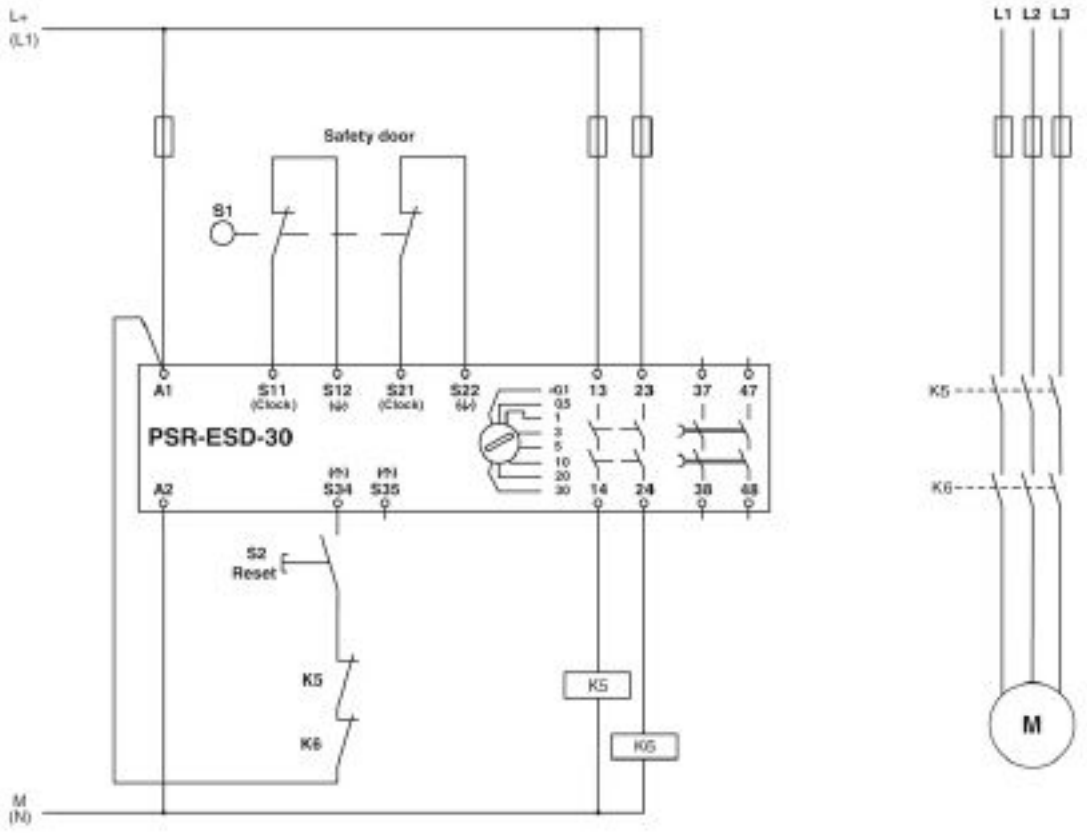

Two-channel safety door monitoring

Classifications

eCl@ss

eCl@ss 10.0.1	27371819
eCl@ss 4.0	40020600
eCl@ss 4.1	40020600
eCl@ss 5.0	27371900
eCl@ss 5.1	27371900
eCl@ss 6.0	27371800
eCl@ss 7.0	27371819
eCl@ss 8.0	27371819
eCl@ss 9.0	27371819

ETIM

ETIM 2.0	EC001449

Safety relays - PSR-SPP- 24DC/ESD/4X1/30 - 2981813

Classifications

ETIM

ETIM 3.0	EC001449
ETIM 4.0	EC001449
ETIM 5.0	EC001449
ETIM 6.0	EC001449
ETIM 7.0	EC001449

UNSPSC

UNSPSC 6.01	30211901
UNSPSC 7.0901	39121501
UNSPSC 11	39121501
UNSPSC 12.01	39121501
UNSPSC 13.2	39121501
UNSPSC 18.0	39122205
UNSPSC 19.0	39122205
UNSPSC 20.0	39122205
UNSPSC 21.0	39122205

Approvals

Approvals

Approvals

UL Listed / cUL Listed / Functional Safety / EAC / EAC / cULus Listed

Ex Approvals

Approval details

UL Listed		http://database.ul.com/cgi-bin/XYV/template/LISEXT/1FRAME/index.htm	FILE E 140324

cUL Listed		http://database.ul.com/cgi-bin/XYV/template/LISEXT/1FRAME/index.htm	FILE E 140324

Safety relays - PSR-SPP- 24DC/ESD/4X1/30 - 2981813

Approvals

Functional Safety		01/205/0656.02/20
EAC		EAC-Zulassung
EAC		RU C-DE.A*30.B.01082
cULus Listed		

Phoenix Contact 2020 © - all rights reserved
http://www.phoenixcontact.com