Power supply unit - QUINT-PS/3AC/48DC/20 - 2320827

Please be informed that the data shown in this PDF Document is generated from our Online Catalog. Please find the complete data in the user's documentation. Our General Terms of Use for Downloads are valid (http://phoenixcontact.com/download)



Primary-switched QUINT POWER power supply for DIN rail mounting with SFB (Selective Fuse Breaking) Technology, input: 3-phase, output: 48 V DC/20 A

Product Description

QUINT POWER power supplies with maximum functionality
QUINT POWER circuit breakers magnetically and therefore quickly trip at six times the nominal current, for selective and therefore cost-effective system protection. The high level of system availability is additionally ensured, thanks to preventive function monitoring, as it reports critical operating states before errors occur.
Reliable starting of heavy loads takes place via the static power reserve POWER BOOST. Thanks to the adjustable voltage, all ranges between 5 V DC ... 56 V DC are covered.

Your advantages

- Adjustable output voltage of 30 to 56 V DC
- Reliable starting of difficult loads with the static POWER BOOST power reserve with up to 1.5 times the nominal current permanently
- Fast tripping of standard circuit breakers with dynamic power reserve SFB (selective fuse breaking) technology with up to 6 times the nominal current for 12 ms
- Preventive function monitoring indicates critical operating states before errors occur

RoHS D H W SFB TECHNOLOGY

Key Commercial Data

Packing unit	1 pc
GTIN	4 046356 547734
GTIN	4046356547734
Weight per Piece (excluding packing)	2,960.000 g
Custom tariff number	85044030
Country of origin	Thailand

Technical data

Dimensions

Power supply unit - QUINT-PS/3AC/48DC/20 - 2320827

Technical data

Dimensions

Width	96 mm
Height	130 mm
Depth	179 mm
Width with alternative assembly	176 mm
Height with alternative assembly	130 mm
Depth with alternative assembly	99 mm

Ambient conditions

Degree of protection	IP20
Ambient temperature (operation)	-25 °C ... 70 °C (> 60 °C Derating: 2.5 %/K)
Ambient temperature (start-up type tested)	-40 °C
Ambient temperature (storage/transport)	-40 °C ... 85 °C
Max. permissible relative humidity (operation)	≤ 95 % (at 25 °C, non-condensing)
Climatic class	3K3 (in acc. with EN 60721)
Degree of pollution	2
Installation height	4000 m

Input data

Nominal input voltage range	3x 400 V AC ... 500 V AC
Input voltage range	3x 320 V AC ... 575 V AC
	2x 360 V AC ... 575 V AC (Not approved by UL)
	450 V DC ... 800 V DC
AC frequency range	45 Hz ... 65 Hz
Frequency range DC	0 Hz
Discharge current to PE	< 3.5 mA
Current consumption	3x 2.1 A (400 V AC)
	3x 1.7 A (500 V AC)
	1.7 A (600 V DC)
Nominal power consumption	1386 VA
Inrush current	< 20 A (typical)
Mains buffering time	typ. 25 ms (400 V AC)
	typ. 35 ms (500 V AC)
Recommended breaker for input protection	6 A ... 16 A (AC: Characteristics B, C, D, K)
Type of protection	Transient surge protection
Protective circuit/component	Varistor

Output data

Nominal output voltage	48 V DC ±1 %
Setting range of the output voltage (U_{Set})	30 V DC ... 56 V DC (> 48 V DC, constant capacity restricted)

Power supply unit - QUINT-PS/3AC/48DC/20 - 2320827

Technical data

Output data

Nominal output current (I_N)	20 A (-25 °C ... 60 °C, U_{OUT} = 48 V DC)
POWER BOOST (I_{Boost})	22.5 A (-25°C ... 40°C permanent, U_{OUT} = 48 V DC)
Selective Fuse Breaking (I_{SFB})	100 A (12 ms)
Derating	60 °C ... 70 °C (2.5%/K)
Connection in parallel	Yes, for redundancy and increased capacity
Connection in series	yes
Feedback voltage resistance	max. 60 V DC
Protection against overvoltage at the output (OVP)	< 60 V DC
Active current limitation	Approx. I_{BOOST} = 22.5 A (for short-circuit)
Control deviation	< 1 % (change in load, static 10 % ... 90 %)
	< 4 % (change in load, dynamic 10 % ... 90 %)
	< 0.1 % (change in input voltage ±10 %)
Residual ripple	< 50 mV_{PP} (with nominal values)
Output power	960 W
Typical response time	< 1 s
Maximum power dissipation in no-load condition	24 W
Power loss nominal load max.	70 W

General

Net weight	2.5 kg
Efficiency	> 93 % (at 400 V AC and nominal values)
MTBF (IEC 61709, SN 29500)	> 890000 h (25 °C)
	> 509000 h (40 °C)
Insulation voltage input/output	4 kV AC (type test)
	2 kV AC (routine test)
Insulation voltage input / PE	3.5 kV AC (type test)
	2 kV AC (routine test)
Insulation voltage output / PE	500 V DC (routine test)
Degree of protection	IP20
Protection class	I
Housing material	Steel sheet, zinc-plated
Mounting position	horizontal DIN rail NS 35, EN 60715
Assembly instructions	alignable: $P_N \geq 50\%$, 5 mm horizontally, 15 mm next to active components, 50 mm vertically alignable: $P_N < 50\%$, 0 mm horizontally, 40 mm vertically top, 20 mm vertically bottom

Connection data, input

Connection method	Screw connection

Power supply unit - QUINT-PS/3AC/48DC/20 - 2320827

Technical data

Connection data, input

Conductor cross section solid min.	0.2 mm²
Conductor cross section solid max.	6 mm²
Conductor cross section flexible min.	0.2 mm²
Conductor cross section flexible max.	4 mm²
Conductor cross section AWG min.	18
Conductor cross section AWG max.	10
Stripping length	7 mm
Screw thread	M3

Connection data, output

Connection method	Screw connection
Conductor cross section solid min.	0.5 mm²
Conductor cross section solid max.	16 mm²
Conductor cross section flexible min.	0.5 mm²
Conductor cross section flexible max.	16 mm²
Conductor cross section AWG min.	8
Conductor cross section AWG max.	6
Stripping length	10 mm
Screw thread	M3

Connection data for signaling

Connection method	Screw connection
Conductor cross section solid min.	0.2 mm²
Conductor cross section solid max.	6 mm²
Conductor cross section flexible min.	0.2 mm²
Conductor cross section flexible max.	4 mm²
Conductor cross section AWG min.	18
Conductor cross section AWG max.	10
Screw thread	M3

Standards

EMC requirements for noise immunity	EN 61000-6-1
	EN 61000-6-2
EMC requirements for noise emission	EN 61000-6-3
	EN 61000-6-4
Standard - Safety of transformers	IEC 61558-2-17
Standard - Electrical safety	IEC 60950-1/VDE 0805 (SELV)
Standard – Electronic equipment for use in electrical power installations and their assembly into electrical power installations	EN 50178/VDE 0160 (PELV)

Power supply unit - QUINT-PS/3AC/48DC/20 - 2320827

Technical data

Standards

Standard – Safety extra-low voltage	IEC 60950-1 (SELV) and EN 60204-1 (PELV)
Standard - Safe isolation	DIN VDE 0100-410
Standard – Protection against shock currents, basic requirements for protective separation in electrical equipment	EN 50178
Standard – Limitation of mains harmonic currents	EN 61000-3-2
Standard - Equipment safety	BG (design tested)
Standard - Approval for medical use	IEC 60601-1, 2 x MOOP
Rail applications	EN 50121-4

Conformance/approvals

UL approvals	UL Listed UL 508
	UL/C-UL Recognized UL 60950-1 (3-wire + PE, star net)
	UL ANSI/ISA-12.12.01 Class I, Division 2, Groups A, B, C, D (Hazardous Location)
CSA	CAN/CSA-C22.2 No. 60950-1-07
	CSA-C22.2 No. 107.1-01

EMC data

Electromagnetic compatibility	Conformance with EMC Directive 2014/30/EU
Low Voltage Directive	Conformance with Low Voltage Directive 2014/35/EC
Electrostatic discharge	EN 61000-4-2
Contact discharge	8 kV (Test Level 4)
Discharge in air	15 kV (Test Level 4)
Electromagnetic HF field	EN 61000-4-3
Frequency range	80 MHz ... 1 GHz
Test field strength	20 V/m (Test Level 3)
Frequency range	1 GHz ... 2 GHz
Test field strength	10 V/m (Test Level 3)
Frequency range	2 GHz ... 3 GHz
Test field strength	10 V/m (Test Level 3)
Comments	Criterion A
Fast transients (burst)	EN 61000-4-4
Input	4 kV (Test Level 4 - asymmetrical)
Output	2 kV (Test Level 3 - asymmetrical)
Signal	2 kV (Test Level 4 - asymmetrical)
Comments	Criterion A
Surge voltage load (surge)	EN 61000-4-5
Input	2 kV (Test Level 3 - symmetrical)
	6 kV (Test Level 4 - asymmetrical)

Power supply unit - QUINT-PS/3AC/48DC/20 - 2320827

Technical data

EMC data

Output	1 kV (Test Level 2 - symmetrical)
	2 kV (Test Level 3 - asymmetrical)
Signal	1 kV (Test Level 2 - asymmetrical)
Comments	Criterion A
Conducted interference	EN 61000-4-6
I/O/S	asymmetrical
Frequency range	0.15 MHz ... 80 MHz
Voltage	10 V (Test Level 3)
Comments	Criterion A
Criterion A	Normal operating behavior within the specified limits.
Criterion B	Temporary impairment to operational behavior that is corrected by the device itself.

Environmental Product Compliance

REACh SVHC	Lead 7439-92-1
China RoHS	Environmentally Friendly Use Period = 25;
	For details about hazardous substances go to tab “Downloads”, Category “Manufacturer's declaration”

Drawings

Block diagram

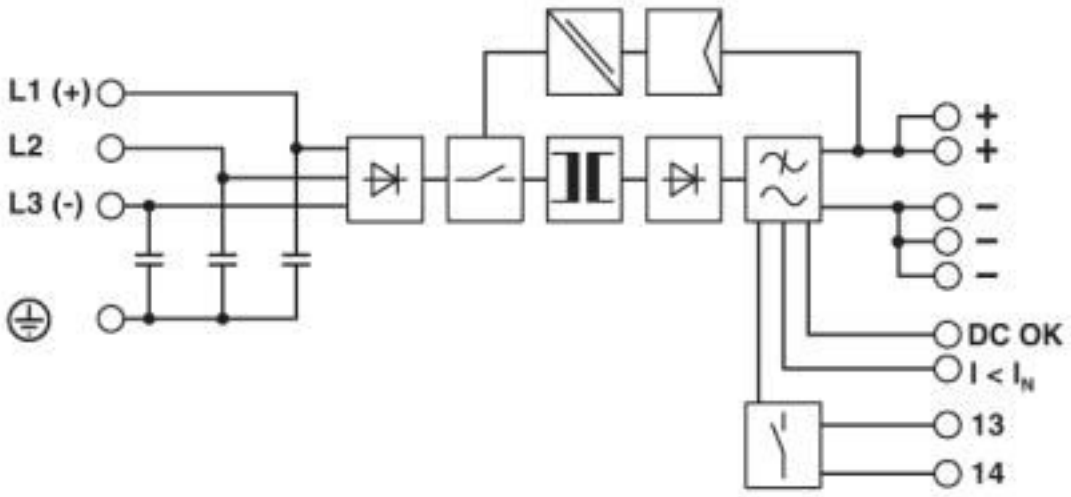

Power supply unit - QUINT-PS/3AC/48DC/20 - 2320827

Classifications

eCl@ss

eCl@ss 10.0.1	27040701
eCl@ss 4.0	27040700
eCl@ss 4.1	27040700
eCl@ss 5.0	27242200
eCl@ss 5.1	27242200
eCl@ss 6.0	27049000
eCl@ss 7.0	27049002
eCl@ss 8.0	27049002
eCl@ss 9.0	27040701

ETIM

ETIM 3.0	EC001039
ETIM 4.0	EC002540
ETIM 5.0	EC002540
ETIM 6.0	EC002540
ETIM 7.0	EC002540

UNSPSC

UNSPSC 6.01	30211502
UNSPSC 7.0901	39121004
UNSPSC 11	39121004
UNSPSC 12.01	39121004
UNSPSC 13.2	39121004
UNSPSC 18.0	39121004
UNSPSC 19.0	39121004
UNSPSC 20.0	39121004
UNSPSC 21.0	39121004

Approvals

Approvals

Approvals

CSA / UL Listed / UL Recognized / cUL Recognized / IECEE CB Scheme / cUL Listed / EAC / Type approved / EAC / cULus Recognized / cULus Listed

Ex Approvals

UL Listed / cUL Listed / cULus Listed

Power supply unit - QUINT-PS/3AC/48DC/20 - 2320827

Approvals

Approval details

CSA	http://www.csagroup.org/services-industries/product-listing/	2386029
UL Listed	http://database.ul.com/cgi-bin/XYV/template/LISEXT/1FRAME/index.htm	FILE E 123528
UL Recognized	http://database.ul.com/cgi-bin/XYV/template/LISEXT/1FRAME/index.htm	FILE E 211944
cUL Recognized	http://database.ul.com/cgi-bin/XYV/template/LISEXT/1FRAME/index.htm	FILE E 211944
IECEE CB Scheme	http://www.iecee.org/	SI-2899
cUL Listed	http://database.ul.com/cgi-bin/XYV/template/LISEXT/1FRAME/index.htm	FILE E 123528
EAC		EAC-Zulassung
Type approved		005-006
EAC		RU*DE*08.B.01873/19

Power supply unit - QUINT-PS/3AC/48DC/20 - 2320827

Approvals

cULus Recognized

cULus Listed

Accessories

Accessories

Assembly adapter

Assembly adapters - UWA 182/52 - 2938235



Universal wall adapter for securely mounting the device in the event of strong vibrations. The device is screwed directly onto the mounting surface. The universal wall adapter is attached on the top/bottom.

Device protection

Type 3 surge protection device - PLT-SEC-T3-3S-230-FM - 2905230



Plug-in device protection, according to type 3/class III, for 3-phase power supply networks with separate N and PE (5-conductor system: L1, L2, L3, N, PE), with integrated surge-proof fuse and remote indication contact.

Type 3 surge protection device - PLT-SEC-T3-60-FM-UT - 2907917



Type 3 surge protection, consisting of protective plug and base element, with integrated status indicator and remote signaling for single-phase power supply networks. Nominal voltage 60 V AC/DC.

Mounting rail adapter

Power supply unit - QUINT-PS/3AC/48DC/20 - 2320827

Accessories

DIN rail adapter - UTA 107 - 2853983



Universal DIN rail adapter, for screwing on switchgear

Redundancy module

Diode - QUINT-DIODE/48DC/2X20/1X40 - 2320160



DIN rail diode module 48 V DC/2x20 A or 1x40 A. Uniform redundancy up to the consumer.

Redundancy module - TRIO-DIODE/48DC/2X10/1X20 - 2866527



Redundancy module with function monitoring, 48 V DC, 2x 10 A, 1x 20 A

Thermomagnetic device circuit breakers

Thermomagnetic device circuit breaker - CB TM1 1A SFB P - 2800836



Thermomagnetic device circuit breaker, 1-pos., tripping characteristic SFB, 1 PDT contact, plug for base element.

Thermomagnetic device circuit breaker - CB TM1 2A SFB P - 2800837



Thermomagnetic device circuit breaker, 1-pos., tripping characteristic SFB, 1 PDT contact, plug for base element.

Power supply unit - QUINT-PS/3AC/48DC/20 - 2320827

Accessories

Thermomagnetic device circuit breaker - CB TM1 3A SFB P - 2800838



Thermomagnetic device circuit breaker, 1-pos., tripping characteristic SFB, 1 PDT contact, plug for base element.

Thermomagnetic device circuit breaker - CB TM1 4A SFB P - 2800839



Thermomagnetic device circuit breaker, 1-pos., tripping characteristic SFB, 1 PDT contact, plug for base element.

Thermomagnetic device circuit breaker - CB TM1 5A SFB P - 2800840



Thermomagnetic device circuit breaker, 1-pos., tripping characteristic SFB, 1 PDT contact, plug for base element.

Thermomagnetic device circuit breaker - CB TM1 6A SFB P - 2800841



Thermomagnetic device circuit breaker, 1-pos., tripping characteristic SFB, 1 PDT contact, plug for base element.

Thermomagnetic device circuit breaker - CB TM1 8A SFB P - 2800842



Thermomagnetic device circuit breaker, 1-pos., tripping characteristic SFB, 1 PDT contact, plug for base element.

Power supply unit - QUINT-PS/3AC/48DC/20 - 2320827

Accessories

Thermomagnetic device circuit breaker - CB TM1 10A SFB P - 2800843



Thermomagnetic device circuit breaker, 1-pos., tripping characteristic SFB, 1 PDT contact, plug for base element.

Phoenix Contact 2020 © - all rights reserved
http://www.phoenixcontact.com