Uninterruptible power supply - QUINT-UPS/ 24DC/ 24DC/40 - 2320241

Please be informed that the data shown in this PDF Document is generated from our Online Catalog. Please find the complete data in the user's documentation. Our General Terms of Use for Downloads are valid (http://phoenixcontact.com/download)



Uninterruptible power supply with IQ technology for DIN rail mounting, input: 24 V DC, output: 24 V DC/40 A, including mounted universal DIN rail adapter UTA 107/30

Product Description

The UPS module for 24 V DC with output currents ranging from 5 to 40 A allows you to create a custom solution combining a power supply, UPS module, and energy storage.

Your advantages

- Easy handling thanks to automatic battery detection, tool-free battery replacement during operation, and communication via the IFS interface
- Optimum use of the buffer time and preventive monitoring of the energy storage
- Rapid battery charging
- Comprehensive signaling and parameterization
- Fast tripping of standard circuit breakers with SFB (selective fuse breaking) technology
- Reliable starting of difficult loads with the static POWER BOOST power reserve with up to 1.5 times the nominal current permanently

RoHS

D H W IQ Technology Designed by PHOENIX CONTACT SFB TECHNOLOGY

Key Commercial Data

Packing unit	1 pc
GTIN	4 046356 554121
GTIN	4046356554121
Weight per Piece (excluding packing)	880.000 g
Custom tariff number	85371091
Country of origin	China

Technical data

Dimensions

Width	47 mm

Uninterruptible power supply - QUINT-UPS/ 24DC/ 24DC/40 - 2320241

Technical data

Dimensions

Height	130 mm
Depth	125 mm
Width with alternative assembly	123 mm
Height with alternative assembly	130 mm
Depth with alternative assembly	51 mm

Ambient conditions

Degree of protection	IP20
Ambient temperature (operation)	-25 °C ... 70 °C
Ambient temperature (storage/transport)	-40 °C ... 85 °C
Max. permissible relative humidity (operation)	≤ 95 % (25 °C, non-condensing)
Climatic class	3K3 (in acc. with EN 60721)

Input data

Input voltage	24 V DC
Nominal input voltage	24 V DC
Input voltage range	18 V DC ... 30 V DC
Current consumption (maximum)	51.9 A (maximum, mains operation)
Current consumption (charging process)	6.9 A (Charging, mains operation)
Fixed backup threshold	≤ 22 V DC
Variable connect threshold	1 V/0.1 s

Output data (24 V DC mains operation)

Nominal output voltage	24 V DC
Output voltage range (depends on the input voltage)	18 V DC ... 30 V DC
Nominal output current (I_N)	40 A (-25 °C ... 50 °C)
POWER BOOST (I_{Boost})	45 A (-25°C ... 40°C)
Selective Fuse Breaking (I_{SFB})	215 A (-25 °C ... 60 °C)

Output data (24 V DC battery operation)

Nominal output voltage	24 V DC
Output voltage range (depends on the input voltage)	19.2 V DC ... 27.6 V DC (U_{OUT} = U_{BAT} - 0.5 V DC)
Nominal output current (I_N)	40 A (-25 °C ... 60 °C)
POWER BOOST (I_{Boost})	45 A (-25°C ... 40°C)
Selective Fuse Breaking (I_{SFB})	215 A (-25 °C ... 60 °C)

General output data

Efficiency	> 99 % (Mains operation, with charged energy storage)

General

Uninterruptible power supply - QUINT-UPS/ 24DC/ 24DC/40 - 2320241

Technical data

General

IQ technology	Yes
Net weight	0.7 kg
Protection class	III
MTBF (IEC 61709, SN 29500)	> 500000 h (40 °C)
Mounting position	horizontal DIN rail NS 35, EN 60715
Assembly instructions	alignable: horizontal 5 mm, vertical 50 mm

Connection data, input

Connection method	Screw connection
Conductor cross section solid min.	0.5 mm²
Conductor cross section solid max.	16 mm²
Conductor cross section flexible min.	0.5 mm²
Conductor cross section flexible max.	16 mm²
Conductor cross section AWG min.	8
Conductor cross section AWG max.	6
Stripping length	10 mm
Screw thread	M4

Connection data, output

Connection method	Screw connection
Conductor cross section solid min.	0.5 mm²
Conductor cross section solid max.	16 mm²
Conductor cross section flexible min.	0.5 mm²
Conductor cross section flexible max.	16 mm²
Conductor cross section AWG min.	8
Conductor cross section AWG max.	6
Stripping length	10 mm
Screw thread	M4

Connection data for signaling

Conductor cross section solid min.	0.2 mm²
Conductor cross section solid max.	4 mm²
Conductor cross section flexible min.	0.2 mm²
Conductor cross section flexible max.	2.5 mm²
Conductor cross section AWG min.	24
Conductor cross section AWG max.	12
Screw thread	M4

Standards

Uninterruptible power supply - QUINT-UPS/ 24DC/ 24DC/40 - 2320241

Technical data

Standards

EMC requirements for noise immunity	EN 61000-6-1
	EN 61000-6-2
EMC requirements for noise emission	EN 61000-6-3
	EN 61000-6-4
Standard - Electrical safety	EN 60950-1/VDE 0805 (SELV)
Standard – Electronic equipment for use in electrical power installations and their assembly into electrical power installations	EN 50178/VDE 0160 (PELV)
Rail applications	EN 50121-4

Conformance/approvals

UL approvals	UL Listed UL 508
	UL/C-UL Recognized UL 60950-1
	UL ANSI/ISA-12.12.01 Class I, Division 2, Groups A, B, C, D (Hazardous Location)

EMC data

Electromagnetic compatibility	Conformance with EMC Directive 2014/30/EU
Low Voltage Directive	Conformance with Low Voltage Directive 2014/35/EC
Electrostatic discharge	EN 61000-4-2
Contact discharge	8 kV (Test Level 4)
Discharge in air	15 kV (Test Level 4)
Electromagnetic HF field	EN 61000-4-3
Frequency range	80 MHz ... 1 GHz
Test field strength	20 V/m
Frequency range	1 GHz ... 3 GHz
Test field strength	10 V/m
Frequency range	2 GHz ... 3 GHz
Test field strength	3 V/m
Comments	Criterion A
Fast transients (burst)	EN 61000-4-4
Input	2 kV (Test Level 3 - asymmetrical)
Output	2 kV (Test Level 3 - asymmetrical)
Signal	2 kV (Test Level 4 - asymmetrical)
Comments	Criterion A
Surge voltage load (surge)	EN 61000-4-5
Input	1 kV (Test Level 2 - symmetrical)
	2 kV (Test Level 3 - asymmetrical)
Output	1 kV (Test Level 2 - symmetrical)
	2 kV (Test Level 3 - asymmetrical)

Uninterruptible power supply - QUINT-UPS/ 24DC/ 24DC/40 - 2320241

Technical data

EMC data

Signal	1 kV (Test Level 2 - asymmetrical)
Comments	Criterion A
I/O/S	asymmetrical
Frequency range	0.15 MHz ... 80 MHz
Voltage	10 V (Test Level 3)
Comments	Criterion A
Criterion A	Normal operating behavior within the specified limits.
Criterion B	Temporary impairment to operational behavior that is corrected by the device itself.

Environmental Product Compliance

REACh SVHC	Lead 7439-92-1
China RoHS	Environmentally Friendly Use Period = 25;
	For details about hazardous substances go to tab “Downloads”, Category “Manufacturer's declaration”

Drawings

Block diagram

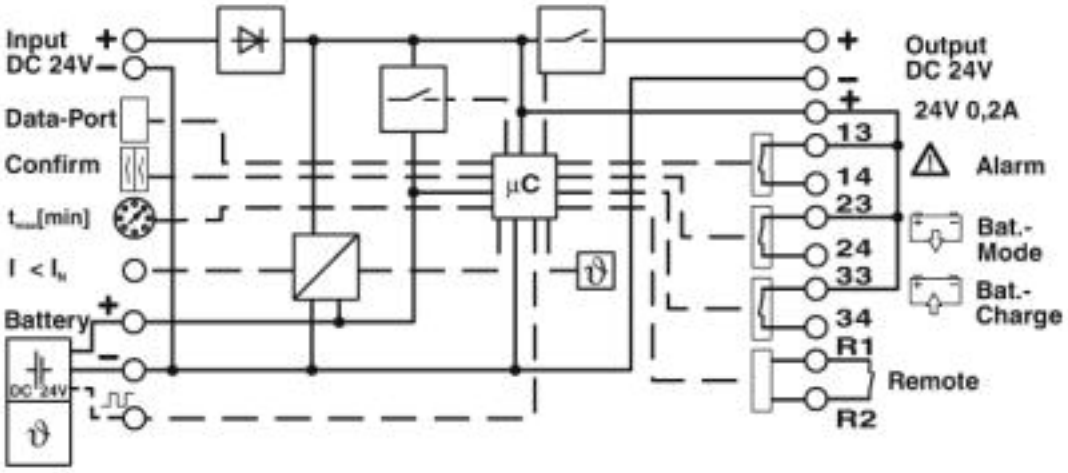

Classifications

eCl@ss

eCl@ss 10.0.1	27040705
eCl@ss 4.0	27040600
eCl@ss 4.1	27040600

Uninterruptible power supply - QUINT-UPS/ 24DC/ 24DC/40 - 2320241

Classifications

eCl@ss

eCl@ss 5.0	27040600
eCl@ss 5.1	27040600
eCl@ss 6.0	27040600
eCl@ss 7.0	27040603
eCl@ss 8.0	27040603
eCl@ss 9.0	27040705

ETIM

ETIM 3.0	EC001039
ETIM 4.0	EC000382
ETIM 5.0	EC000382
ETIM 6.0	EC000382
ETIM 7.0	EC000382

UNSPSC

UNSPSC 6.01	30211510
UNSPSC 7.0901	39121011
UNSPSC 11	39121011
UNSPSC 12.01	39121011
UNSPSC 13.2	39121011
UNSPSC 18.0	39121011
UNSPSC 19.0	39121011
UNSPSC 20.0	39121011
UNSPSC 21.0	39121011

Approvals

Approvals

Approvals

DNV GL / PRS / BV / LR / ABS / UL Listed / UL Recognized / cUL Recognized / cUL Listed / EAC / EAC / cULus Recognized / cULus Listed

Ex Approvals

UL Listed / cUL Listed / cULus Listed

Approval details

Uninterruptible power supply - QUINT-UPS/ 24DC/ 24DC/40 - 2320241

Approvals

DNV GL	https://approvalfinder.dnvgl.com/	TAA0000265

Nominal voltage UN	500 V
Nominal current IN	41 A
mm²/AWG/kcmil	6

PRS	http://www.prs.pl/	TE/2103/880590/16
BV	http://www.veristar.com/portal/veristarinfo/generalinfo/approved/approvedProducts/equipmentAndMaterials	41516/A0 BV
LR	http://www.lr.org/en	17/20032
ABS	http://www.eagle.org/eagleExternalPortalWEB/	15-GD1438179-PDA
UL Listed	http://database.ul.com/cgi-bin/XYV/template/LISEXT/1FRAME/index.htm	FILE E 123528
UL Recognized	http://database.ul.com/cgi-bin/XYV/template/LISEXT/1FRAME/index.htm	FILE E 211944
cUL Recognized	http://database.ul.com/cgi-bin/XYV/template/LISEXT/1FRAME/index.htm	FILE E 211944
cUL Listed	http://database.ul.com/cgi-bin/XYV/template/LISEXT/1FRAME/index.htm	FILE E 123528

Uninterruptible power supply - QUINT-UPS/ 24DC/ 24DC/40 - 2320241

Approvals

EAC		EAC-Zulassung
EAC		RU*DE*08.B.01873/19
cULus Recognized		
cULus Listed		

Accessories

Accessories

Assembly adapter

Assembly adapters - QUINT-PS-ADAPTERS7/1 - 2938196



Assembly adapter for QUINT-PS... power supply on S7-300 rail

Assembly adapters - UWA 182/52 - 2938235



Universal wall adapter for securely mounting the device in the event of strong vibrations. The device is screwed directly onto the mounting surface. The universal wall adapter is attached on the top/bottom.

Uninterruptible power supply - QUINT-UPS/ 24DC/ 24DC/40 - 2320241

Accessories

Assembly adapters - UTA 107/30 - 2320089



Universal DIN rail adapter

Battery unit

Energy storage - UPS-BAT/VRLA/24DC/7.2AH - 2320319



Energy storage device, lead AGM, VRLA technology, 24 V DC, 7.2 Ah, tool-free battery replacement, automatic detection, and communication with QUINT UPS-IQ

Energy storage - UPS-BAT/VRLA/24DC/12AH - 2320322



Energy storage device, lead AGM, VRLA technology, 24 V DC, 12 Ah, tool-free battery replacement, automatic detection, and communication with QUINT UPS-IQ

Energy storage - UPS-BAT/VRLA/24DC/38AH - 2320335



Energy storage device, lead AGM, VRLA technology, 24 V DC, 38 Ah, automatic detection, and communication with QUINT UPS-IQ

Energy storage - UPS-BAT/VRLA-WTR/24DC/13AH - 2320416



Energy storage device, lead AGM, VRLA technology, 24 V DC, 13 Ah, tool-free battery replacement, automatic detection, and communication with QUINT UPS-IQ

Uninterruptible power supply - QUINT-UPS/ 24DC/ 24DC/40 - 2320241

Accessories

Energy storage - UPS-BAT/VRLA-WTR/24DC/26AH - 2320429



Energy storage device, lead AGM, VRLA technology, 24 V DC, 26 Ah, tool-free battery replacement, automatic detection, and communication with QUINT UPS-IQ

Energy storage - UPS-BAT/LI-ION/24DC/120WH - 2320351



Energy storage device, LI-ION technology, 24 V DC, 120 Wh, for ambient temperatures of -20°C ... 60°C, automatic detection and communication with QUINT UPS-IQ

Energy storage - UPS-CAP/24DC/10A/10KJ - 2320377



Maintenance-free energy storage based on double-layer capacitor, 24 V DC, 10 kJ, automatic detection and communication with QUINT UPS-IQ

Energy storage - UPS-CAP/24DC/20A/20KJ - 2320380



Maintenance-free energy storage based on double-layer capacitor, 24 V DC, 20 kJ, automatic detection and communication with QUINT UPS-IQ

Data cable preassembled

Data cable - IFS-RS232-DATACABLE - 2320490



Data cable for communication between devices with a D-SUB 9 RS-232 connection and Phoenix Contact devices with the 12-pos. IFS data port such as QUINT UPS-IQ or TRIO UPS.

Uninterruptible power supply - QUINT-UPS/ 24DC/ 24DC/40 - 2320241

Accessories

Data cable - IFS-USB-DATACABLE - 2320500



Used for communicating between industrial PCs and Phoenix Contact devices with the 12-pos. IFS data port, such as QUINT UPS or TRIO UPS.

Memory block

Memory block - IFS-CONFSTICK - 2986122



Multi-functional memory block for the INTERFACE systemf for easy storage and backup of the configuration.

Memory block - IFS-CONFSTICK-L - 2901103



Multi-functional memory block with handle for the INTERFACE system; for easy storage and back up of the configuration.

Phoenix Contact 2020 © - all rights reserved
http://www.phoenixcontact.com