Connector - SACC-M12MS-4CON-PG 7-SH - 1693830

Please be informed that the data shown in this PDF Document is generated from our Online Catalog. Please find the complete data in the user's documentation. Our General Terms of Use for Downloads are valid (http://phoenixcontact.com/download)



Connector, Universal, 4-position, shielded, Plug straight M12, Coding: A, Screw connection, knurl material: Zinc die-cast, nickel-plated, cable gland Pg7, external cable diameter 4 mm ... 6 mm

Your advantages

- Safe use in the field, thanks to a high degree of protection
- Flexible: connectors for on-site assembly
- Screw connection: proven connection technology for a large selection of different conductors
- Reliable signal transmission - 360° shielding in environments with electromagnetic interference

RoHS

Key Commercial Data

Packing unit	1 pc
GTIN	4 017918 188689
GTIN	4017918188689
Weight per Piece (excluding packing)	48.200 g
Custom tariff number	85366990
Country of origin	Germany

Technical data

Dimensions

Diameter housing	20 mm
Length	62 mm
External cable diameter	4 mm ... 6 mm
Stripping length of the sheath	35 mm
Stripping length of the individual wire	5 mm

Connector - SACC-M12MS-4CON-PG 7-SH - 1693830

Technical data

Ambient conditions

Ambient temperature (operation)	-40 °C ... 85 °C (Plug / socket)
Degree of protection	IP67

General

Note	NOTE: Observe the permissible bending radii when laying conductors, since the degree of protection may be put in jeopardy if the bending forces are too high. Alleviate mechanical loads upstream of the connector, e.g. by using cable ties.
Rated current at 40°C	4 A
Rated voltage	48 V AC
	60 V DC
Number of positions	4
Insulation resistance	≥ 100 MΩ
Coding	A - standard
Standards/regulations	M12 connector IEC 61076-2-101
Signal type/category	Universal
Status display	No
Overvoltage category	II
Degree of pollution	3
Connection method	Screw connection
Conductor cross section	0.25 mm² ... 0.75 mm² (without ferrule)
	0.14 mm² ... 0.75 mm² (with ferrule)
	0.25 mm² ... 0.75 mm² (solid)
Conductor cross section AWG	24 ... 18 (without ferrule)
	26 ... 20 (with ferrule)
Insertion/withdrawal cycles	≥ 100
Torque	0.4 Nm (M12 knurl)
	0.2 Nm (Screw terminal blocks)
	0.8 Nm ... 1 Nm (Pressure nut with coupling sleeve)
Tightening torque	Screw plug insert with sleeve housing as far it will go
Assembly instructions	The wires can be connected both with ferrules and without ferrules

Material

Flammability rating according to UL 94	HB
Contact material	CuZn
Contact surface material	Au
Contact carrier material	PA
Material of grip body	Zinc die-cast, nickel-plated
Material, knurls	Zinc die-cast, nickel-plated

Connector - SACC-M12MS-4CON-PG 7-SH - 1693830

Technical data

Material

Sealing material	NBR

Standards and Regulations

Standards/specifications	M12 connector IEC 61076-2-101
Connection in acc. with standard	CUL
Flammability rating according to UL 94	HB

Environmental Product Compliance

REACh SVHC	Lead 7439-92-1
China RoHS	Environmentally Friendly Use Period = 50 years
	For details about hazardous substances go to tab “Downloads”, Category “Manufacturer's declaration”

Drawings

Dimensional drawing

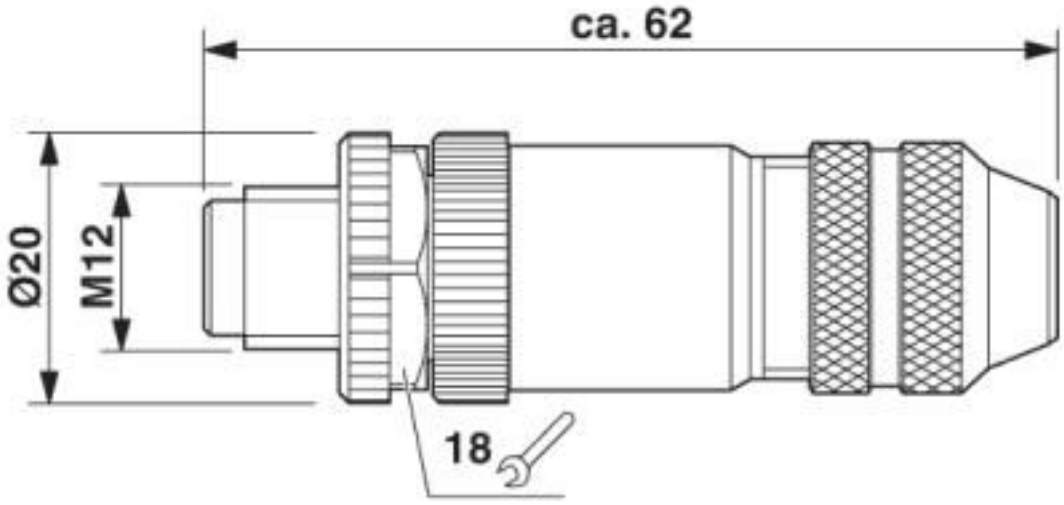

Plug, M12 x 1, straight, shielded

Connector - SACC-M12MS-4CON-PG 7-SH - 1693830

Schematic diagram

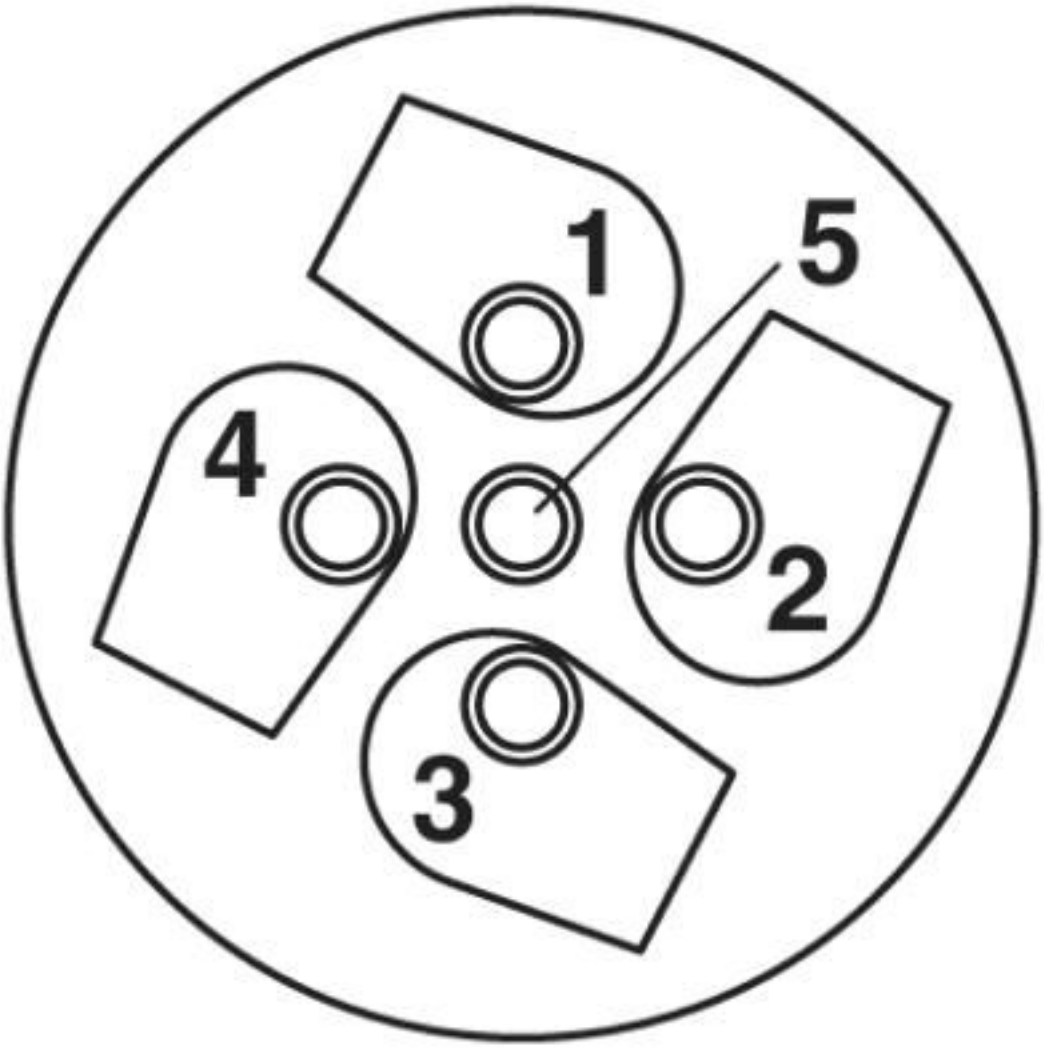

Cable connection side M12 (screw connection)

Connector - SACC-M12MS-4CON-PG 7-SH - 1693830

Schematic diagram

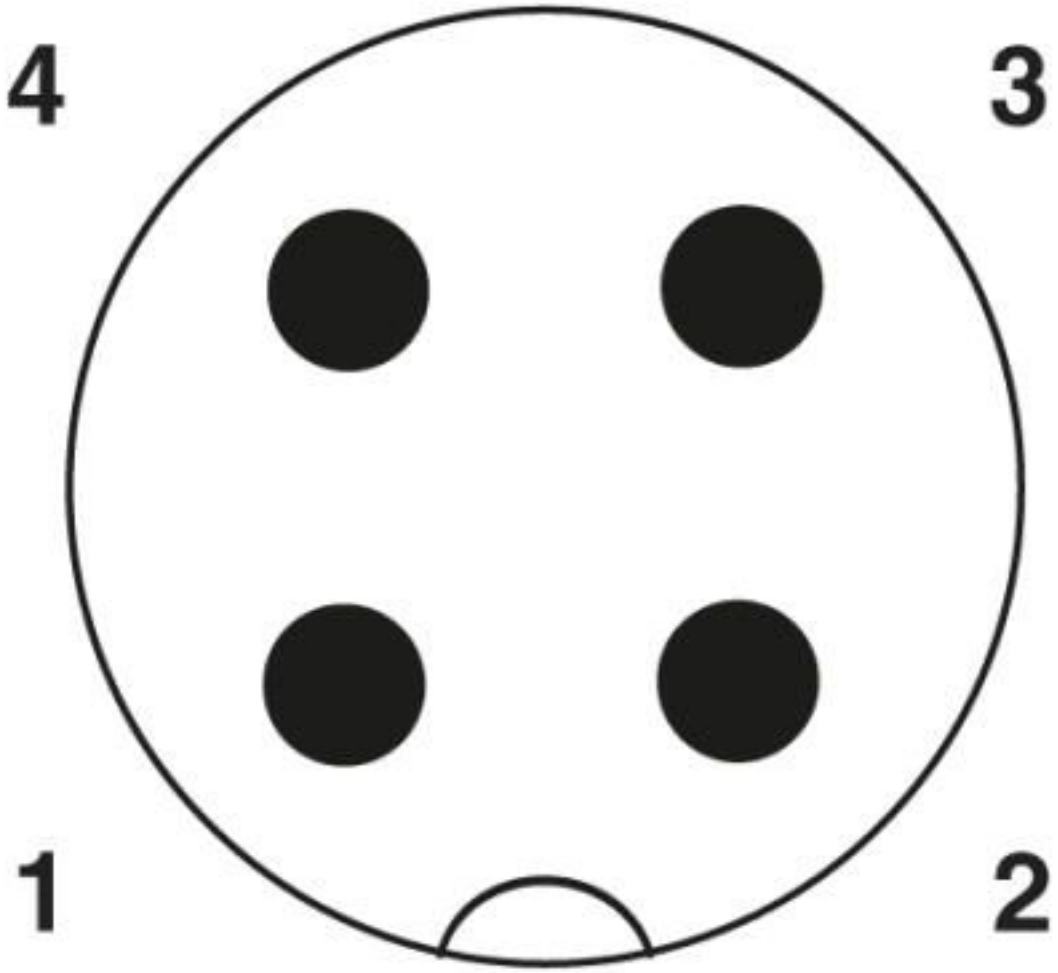

Pin assignment M12 plug, 4-pos., A-coded, view plug side

Classifications

eCl@ss

eCl@ss 10.0.1	27440102
eCl@ss 4.0	27140800
eCl@ss 4.1	27140800
eCl@ss 5.0	27143400
eCl@ss 5.1	27143400
eCl@ss 6.0	27279200
eCl@ss 7.0	27440104

Connector - SACC-M12MS-4CON-PG 7-SH - 1693830

Classifications

eCl@ss

eCl@ss 8.0	27440104
eCl@ss 9.0	27440102

ETIM

ETIM 2.0	EC001121
ETIM 3.0	EC002062
ETIM 4.0	EC002062
ETIM 5.0	EC002062
ETIM 6.0	EC002062

UNSPSC

UNSPSC 6.01	31251501
UNSPSC 7.0901	31251501
UNSPSC 11	31251501
UNSPSC 12.01	31251501
UNSPSC 13.2	39121413
UNSPSC 18.0	39121413
UNSPSC 19.0	39121413
UNSPSC 20.0	39121413
UNSPSC 21.0	39121413

Approvals

Approvals

Approvals

UL Recognized / cUL Recognized / cULus Recognized

Ex Approvals

Approval details

UL Recognized		http://database.ul.com/cgi-bin/XYV/template/LISEXT/1FRAME/index.htm	FILE E 221474

Nominal voltage UN	250 V

Connector - SACC-M12MS-4CON-PG 7-SH - 1693830

Approvals

Nominal current IN	4 A

cUL Recognized http://database.ul.com/cgi-bin/XYV/template/LISEXT/1FRAME/index.htm FILE E 221474

Nominal voltage UN	250 V
Nominal current IN	4 A

cULus Recognized

Accessories

Accessories

Cable by the meter

Cable reel - SAC-4P-100,0-PUR/SH-0,25 - 1535794



By the meter, Cable reel, shielded, PUR halogen-free, black-gray RAL 7021, 4-wire, color single wire: brown, white, blue, black, cable length: 100 m

Cable reel - SAC-4P-100,0-PUR/SH-0,34 - 1501715



By the meter, Cable reel, shielded, PUR halogen-free, black-gray RAL 7021, 4-wire, color single wire: brown, white, blue, black, cable length: 100 m

Cable end sleeve

Connector - SACC-M12MS-4CON-PG 7-SH - 1693830

Accessories

Ferrule - A 0,25- 5 - 3202465



Ferrule, length: 5 mm, color: silver

Crimping tool

Crimping pliers - CRIMPFOX 6H - 1212046



Crimping pliers, for ferrules without insulating collar according to DIN 46228 Part 1 and ferrules with insulating collar according to DIN 46228 Part 4, 0.14 mm² ... 6 mm², unlockable pressure lock, lateral entry

---

Protective cap

Sealing cap - PROT-M12 FS-PA-CHAIN - 1430873

M12 sealing cap made of plastic with fixing band, for sensor cables, for free M12 plugs



Screwdriver tools

Tool - SACC BIT M12-D20 - 1208445



Nut for assembling M12 connectors for assembly with a knurl diameter of 20 mm, for 4 mm hexagonal drive

---

Connector - SACC-M12MS-4CON-PG 7-SH - 1693830

Accessories

Adapter insert - TSD-M SAC-BIT ADAPTER - 1212600

Adapter bit for TSD-M...torque tools, E6.3-1/4" drive with 4 mm hexagon to accommodate SAC bits

Screwdriver - SZF 1-0,6X3,5 - 1204517



Actuation tool, for ST terminal blocks, also suitable for use as a bladed screwdriver, size: 0.6 x 3.5 x 100 mm, 2-component grip, with non-slip grip

Torque tool

Torque screwdriver - TSD 04 SAC - 1208429



Torque screwdriver, with preset torque of 0.4 Nm and 4 mm hexagonal drive for M12 connectors

Torque screwdriver - TSD-M 1,2NM - 1212224



Torque screw driver, accuracy as per EN ISO 6789 standard, adjustable from 0.3 - 1.2 Nm

Phoenix Contact 2020 © - all rights reserved
http://www.phoenixcontact.com