Connector - SACC-MS-12PCON SCO - 1559592

Please be informed that the data shown in this PDF Document is generated from our Online Catalog. Please find the complete data in the user's documentation. Our General Terms of Use for Downloads are valid (http://phoenixcontact.com/download)



Connector, Universal, 12-position, Plug straight M12 SPEEDCON, A-coded, Piercecon® fast connection, knurl material: Zinc die-cast, nickel-plated, external cable diameter 5.4 mm ... 8.2 mm

Your advantages

- Safe use in the field, thanks to a high degree of protection
- Flexible: connectors for on-site assembly
- Save time, thanks to installation with SPEEDCON fast locking system
- Piercecon® connection: maximum contact density in a connector that can be assembled
- Save space – with high-pos. connectors

Key Commercial Data

Packing unit	1 pc
GTIN	4 046356 314855
GTIN	4046356314855
Weight per Piece (excluding packing)	100.000 g
Custom tariff number	85366990
Country of origin	Germany

Technical data

Dimensions

Wrench size, union nut	13 mm
Diameter housing	16 mm
Length	42.7 mm
External cable diameter	5.4 mm ... 8.2 mm
Stripping length of the sheath	≥ 60 mm

Connector - SACC-MS-12PCON SCO - 1559592

Technical data

Ambient conditions

Ambient temperature (operation)	-25 °C ... 85 °C (Plug / socket)
Degree of protection	IP67

General

Note	NOTE: Observe the permissible bending radii when laying conductors, since the degree of protection may be put in jeopardy if the bending forces are too high. Alleviate mechanical loads upstream of the connector, e.g. by using cable ties.
Rated current at 40°C	1.5 A
Rated voltage	30 V AC
	30 V DC
Number of positions	12
Insulation resistance	≥ 100 MΩ
Coding	A - standard
Standards/regulations	M12 connector IEC 61076-2-101
Signal type/category	Universal
Status display	No
Overvoltage category	II
Degree of pollution	3
Connection method	Piercecon® fast connection
Conductor cross section	0.14 mm² ... 0.14 mm² (without ferrule)
Conductor cross section AWG	26 ... 26 (without ferrule)
Wire diameter including insulation	0.95 mm ... 1.05 mm
Frequency of connections between conductors of the same cross section	≥ 5
Wire insulation material	PUR/PVC
Structure of individual litz in acc. with VDE 0295 / smallest wire diameter	VDE 0295 Class 6
Insertion/withdrawal cycles	≥ 100
Torque	0.4 Nm (M12 knurl)

Material

Flammability rating according to UL 94	V0
Contact material	CuZn
Contact surface material	Ni/Au
Contact carrier material	PA
Material of grip body	Zinc die-cast, nickel-plated
Material, knurls	Zinc die-cast, nickel-plated
Sealing material	FKM

Standards and Regulations

Standard designation	M12 connector

Connector - SACC-MS-12PCON SCO - 1559592

Technical data

Standards and Regulations

Standards/regulations	IEC 61076-2-101
Flammability rating according to UL 94	V0

Environmental Product Compliance

	Lead 7439-92-1
China RoHS	Environmentally Friendly Use Period = 50
	For details about hazardous substances go to tab “Downloads”, Category “Manufacturer's declaration”

Drawings

Connector - SACC-MS-12PCON SCO - 1559592

Schematic diagram

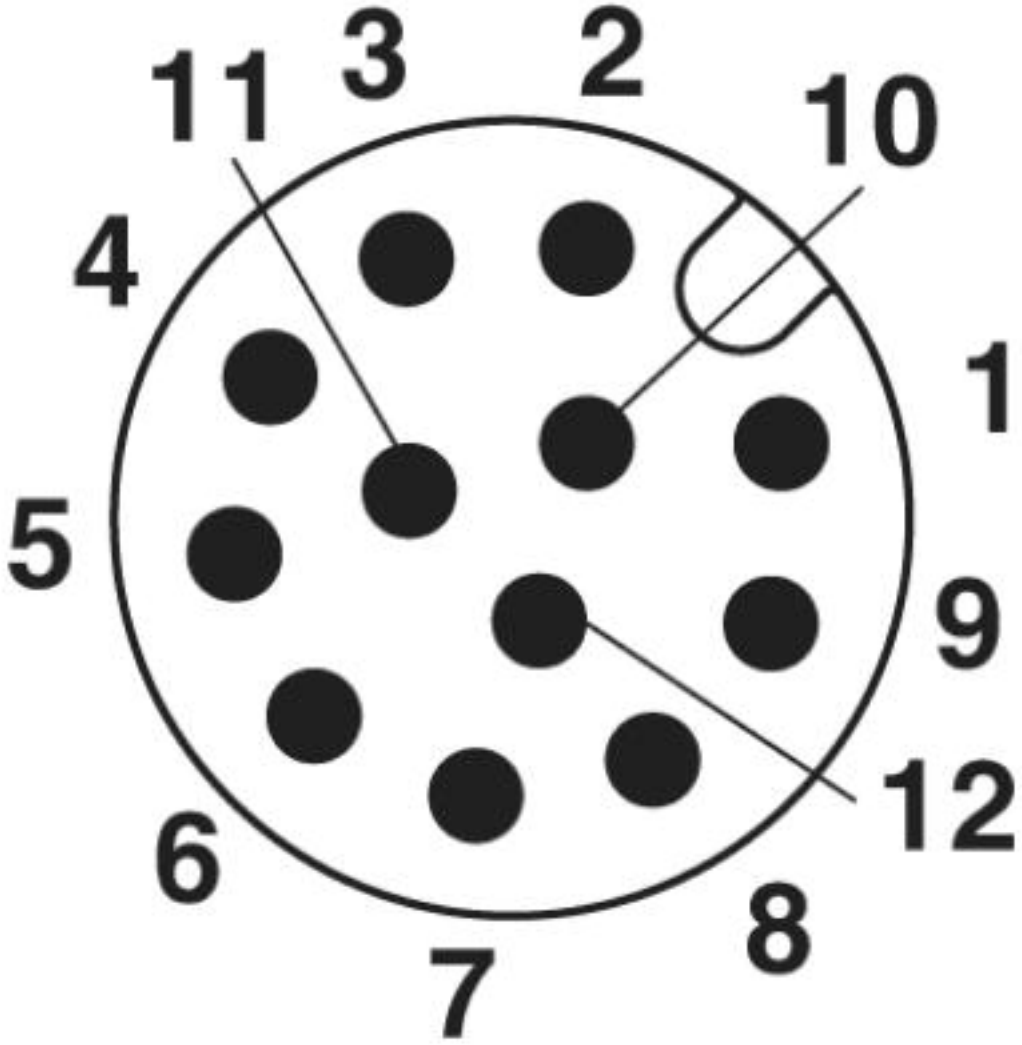

Pin assignment M12 male connector, 12-pos., male side view

Connector - SACC-MS-12PCON SCO - 1559592

Dimensional drawing

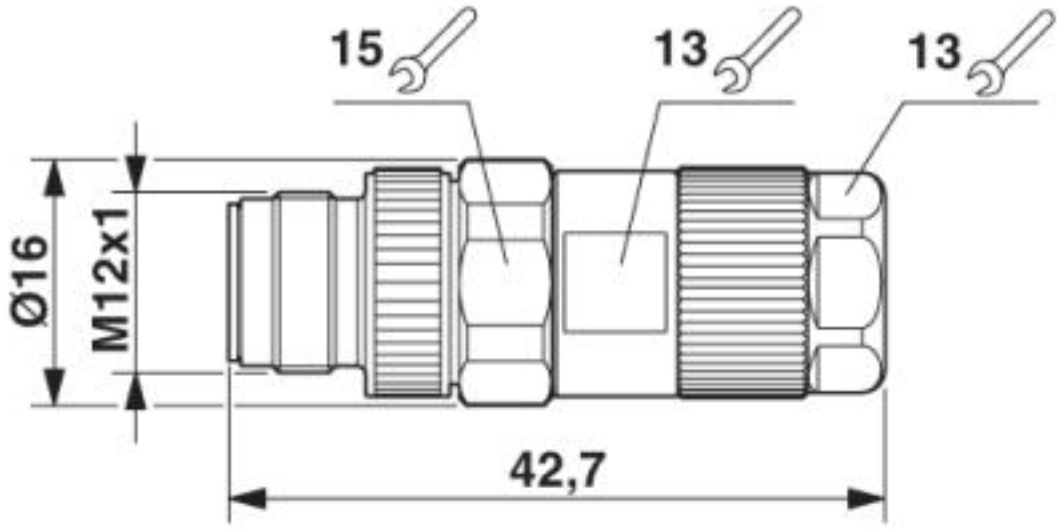

Plug, M12 x 1, straight

Classifications

eCl@ss

eCl@ss 10.0.1	27440102
eCl@ss 4.0	27140800
eCl@ss 4.1	27140800
eCl@ss 5.0	27143400
eCl@ss 5.1	27143400
eCl@ss 6.0	27279200
eCl@ss 7.0	27440104
eCl@ss 8.0	27440104
eCl@ss 9.0	27440102

ETIM

ETIM 2.0	EC001121
ETIM 3.0	EC002062
ETIM 4.0	EC002062
ETIM 5.0	EC002062
ETIM 6.0	EC002062

UNSPSC

UNSPSC 6.01	30211824

Connector - SACC-MS-12PCON SCO - 1559592

Classifications

UNSPSC

UNSPSC 7.0901	39121413
UNSPSC 11	39121413
UNSPSC 12.01	39121413
UNSPSC 13.2	39121413

Approvals

Approvals

Approvals

EAC

Ex Approvals

Approval details

EAC	EAC	EAC-Zulassung

Accessories

Accessories

Cable by the meter

Cable reel - SAC-12P-100,0-PVC/0,14 - 1441532



Cable reel, 12-position, PVC, black RAL 9005, free cable end, on free cable end, cable length: 100 m

Electronics pliers

Connector - SACC-MS-12PCON SCO - 1559592

Accessories

Diagonal cutter - MICROFOX-SP-1 - 1212487



Electronic diagonal cutter, tapered head, without chamfer, with opening spring, non-reflective phosphate-treated surface, punched version

---

Protective cap

Sealing cap - PROT-M12 FS-PA-CHAIN - 1430873

M12 sealing cap made of plastic with fixing band, for sensor cables, for free M12 plugs



Screwdriver tools

Tool - SAC BIT M12-D15 - 1208432



Nut for assembling sensor/actuator cables with M12 connector and M12 connectors for assembly, with a knurl diameter of 15 mm, for 4 mm hexagonal drive

---

Adapter insert - TSD-M SAC-BIT ADAPTER - 1212600

Adapter bit for TSD-M...torque tools, E6.3-1/4" drive with 4 mm hexagon to accommodate SAC bits

---

Stripping tool

Connector - SACC-MS-12PCON SCO - 1559592

Accessories

Stripping tool - WIREFOX SAC - 1212623



Stripping pliers, for halogen-free sensor/actuator cables (SAC cables), with PUR and PVC insulation, from Ø of 4.4 to 7 mm, any stripping length

---

Torque tool

Torque screwdriver - TSD 04 SAC - 1208429



Torque screwdriver, with preset torque of 0.4 Nm and 4 mm hexagonal drive for M12 connectors

---

Torque screwdriver - TSD-M 1,2NM - 1212224



Torque screw driver, accuracy as per EN ISO 6789 standard, adjustable from 0.3 - 1.2 Nm

---

Phoenix Contact 2019 © - all rights reserved
http://www.phoenixcontact.com