Power supply unit - STEP-PS/ 1AC/24DC/4.2 - 2868664

Please be informed that the data shown in this PDF Document is generated from our Online Catalog. Please find the complete data in the user's documentation. Our General Terms of Use for Downloads are valid (http://phoenixcontact.com/download)



Primary-switched STEP POWER power supply for DIN rail mounting, input: 1-phase, output: 24 V DC/4.2 A

Product Description

STEP POWER power supplies for distribution boards
The STEP POWER power supply range was developed especially for building automation. The low idling losses and high degree of efficiency ensure maximum energy efficiency. They allow flexible use and can be snapped onto the DIN rail or screwed onto an even surface.

Your advantages

- Flexible mounting by simply snapping onto the DIN rail or screwing onto a level surface
- Reliable power supply thanks to high MTBF (mean time between failures) of more than 500,000 hours and U/I characteristic curve
- Energy savings thanks to maximum energy efficiency and incredibly low idling losses

RoHS C1 D2



Key Commercial Data

Packing unit	1 pc
GTIN	4 046356 287975
GTIN	4046356287975
Weight per Piece (excluding packing)	381.600 g
Custom tariff number	85044030
Country of origin	Vietnam

Technical data

Dimensions

Width	90 mm
Height	90 mm
Depth	61 mm

Power supply unit - STEP-PS/ 1AC/24DC/4.2 - 2868664

Technical data

Dimensions

Installation distance right/left	0 mm / 0 mm
Installation distance top/bottom	30 mm / 30 mm

Ambient conditions

Degree of protection	IP20
Ambient temperature (operation)	-25 °C ... 70 °C (> 55° C derating : 2.5%/K)
Ambient temperature (storage/transport)	-40 °C ... 85 °C
Max. permissible relative humidity (operation)	≤ 95 % (at 25 °C, non-condensing)
Climatic class	3K3 (in acc. with EN 60721)
Degree of pollution	2

Input data

Nominal input voltage range	100 V AC ... 240 V AC
Input voltage range	85 V AC ... 264 V AC
	95 V DC ... 250 V DC
AC frequency range	45 Hz ... 65 Hz
Frequency range DC	0 Hz
Current consumption	1.3 A (120 V AC)
	0.8 A (230 V AC)
Nominal power consumption	196.7 VA
Inrush current	< 15 A (typical)
Mains buffering time	typ. 20 ms (120 V AC)
	typ. 100 ms (230 V AC)
Input fuse	4 A (slow-blow, internal)
Recommended breaker for input protection	6 A ... 16 A (Characteristics B, C, D, K)
Power factor (cos phi)	0.58
Type of protection	Transient surge protection
Protective circuit/component	Varistor

Output data

Nominal output voltage	24 V DC ±1 %
Setting range of the output voltage (U_{Set})	22.5 V DC ... 29.5 V DC (> 24 V DC, constant capacity restricted)
Nominal output current (I_N)	4.2 A (-25 °C ... 55 °C)
	4.4 A (-25°C ... 40°C permanent)
Output current I_{max}	6.5 A
Derating	55 °C ... 70 °C (2.5%/K)
Connection in parallel	Yes, for redundancy and increased capacity
Connection in series	yes
Feedback voltage resistance	≤ 35 V DC

Power supply unit - STEP-PS/ 1AC/24DC/4.2 - 2868664

Technical data

Output data

Protection against overvoltage at the output (OVP)	< 35 V DC
Control deviation	< 1 % (change in load, static 10 % ... 90 %)
	< 2 % (change in load, dynamic 10 % ... 90 %)
	< 0.1 % (change in input voltage ±10 %)
Residual ripple	< 40 mV_{PP} (20 MHz)
Output power	100.8 W
Typical response time	< 0.5 s
Peak switching voltages nominal load	< 30 mV_{PP} (20 MHz)
Maximum power dissipation in no-load condition	< 0.7 W
Power loss nominal load max.	13.2 W

General

Net weight	0.33 kg
Efficiency	> 88 % (for 230 V AC and nominal values)
	> 897000 h (40 °C)
Insulation voltage input/output	4 kV AC (type test)
	3.75 kV AC (routine test)
Degree of protection	IP20
Protection class	II (in closed control cabinet)
Housing material	Polycarbonate
Foot latch material	POM (Polyoxymethylen)
Mounting position	horizontal DIN rail NS 35, EN 60715
Assembly instructions	alignable: 0 mm horizontally, 30 mm vertically

Connection data, input

Connection method	Screw connection
Conductor cross section solid min.	0.2 mm²
Conductor cross section solid max.	2.5 mm²
Conductor cross section flexible min.	0.2 mm²
Conductor cross section flexible max.	2.5 mm²
Conductor cross section AWG min.	24
Conductor cross section AWG max.	12
Stripping length	6.5 mm
Screw thread	M3

Connection data, output

Connection method	Screw connection
Conductor cross section solid min.	0.2 mm²
Conductor cross section solid max.	2.5 mm²

Power supply unit - STEP-PS/ 1AC/24DC/4.2 - 2868664

Technical data

Connection data, output

Conductor cross section flexible min.	0.2 mm²
Conductor cross section flexible max.	2.5 mm²
Conductor cross section AWG min.	24
Conductor cross section AWG max.	12
Stripping length	6.5 mm
Screw thread	M3

Standards

EMC requirements for noise immunity	EN 61000-6-1
	EN 61000-6-2
EMC requirements for noise emission	EN 61000-6-3
	EN 61000-6-4
Standard - Safety of transformers	EN 61558-2-16
Standard - Electrical safety	IEC 60950-1/VDE 0805 (SELV)
Standard – Electronic equipment for use in electrical power installations and their assembly into electrical power installations	EN 50178/VDE 0160 (PELV)
Standard – Safety extra-low voltage	IEC 60950-1 (SELV) and EN 60204-1 (PELV)
Standard - Safe isolation	DIN VDE 0100-410
Standard – Protection against shock currents, basic requirements for protective separation in electrical equipment	EN 50178
Standard – Limitation of mains harmonic currents	EN 61000-3-2
Rail applications	EN 50121-4

Conformance/approvals

UL approvals	UL/C-UL listed UL 508
	UL/C-UL Recognized UL 60950-1
	UL ANSI/ISA-12.12.01 Class I, Division 2, Groups A, B, C, D T4A (Hazardous Location)
CSA	CSA-C22.2 No. 107.1-01
Shipbuilding approval	DNV GL (EMC B) ABS, NK

EMC data

Electromagnetic compatibility	Conformance with EMC Directive 2014/30/EU
Low Voltage Directive	Conformance with Low Voltage Directive 2014/35/EC
Electrostatic discharge	EN 61000-4-2
Electromagnetic HF field	EN 61000-4-3
Fast transients (burst)	EN 61000-4-4
Surge voltage load (surge)	EN 61000-4-5
Input	2 kV (Test Level 3 - symmetrical)
	4 kV (Test Level 4 - asymmetrical)

Power supply unit - STEP-PS/ 1AC/24DC/4.2 - 2868664

Technical data

EMC data

Output	1 kV (Test Level 2 - symmetrical)
	1 kV (Test Level 2 - asymmetrical)
Comments	Criterion A
Conducted interference	EN 61000-4-6
Voltage dips	EN 61000-4-11

Environmental Product Compliance

REACh SVHC	Lead 7439-92-1
China RoHS	Environmentally Friendly Use Period = 25;
	For details about hazardous substances go to tab “Downloads”, Category “Manufacturer's declaration”

Drawings

Block diagram

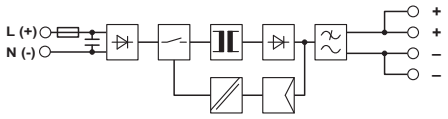

Dimensional drawing

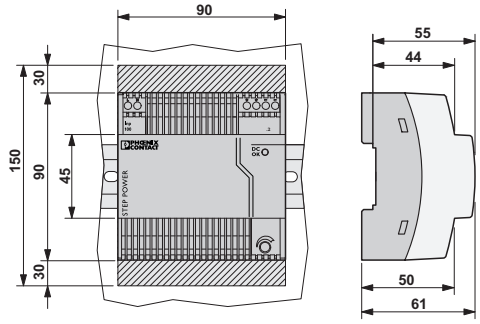

Schematic diagram

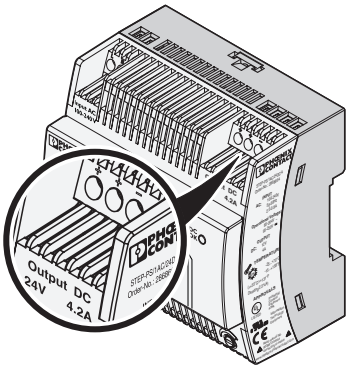

Schematic diagram

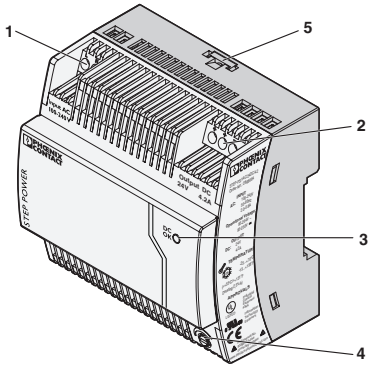

Power supply unit - STEP-PS/ 1AC/24DC/4.2 - 2868664

Schematic diagram

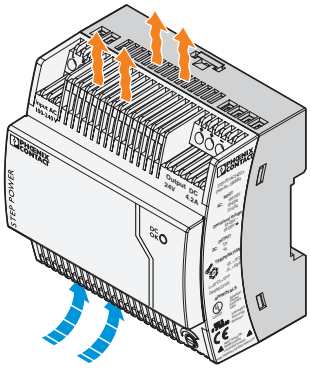

Schematic diagram

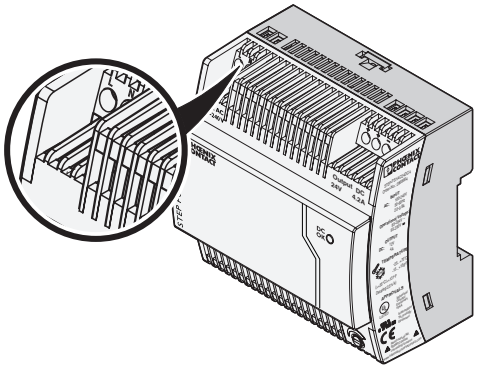

Classifications

eCl@ss

eCl@ss 10.0.1	27040701
eCl@ss 11.0	27040701
eCl@ss 4.0	27040700
eCl@ss 4.1	27040700
eCl@ss 5.0	27242200
eCl@ss 5.1	27242200
eCl@ss 6.0	27049000
eCl@ss 7.0	27049002
eCl@ss 8.0	27049002
eCl@ss 9.0	27040701

ETIM

ETIM 2.0	EC001039
ETIM 3.0	EC001039
ETIM 4.0	EC002540
ETIM 5.0	EC002540
ETIM 6.0	EC002540
ETIM 7.0	EC002540

UNSPSC

UNSPSC 6.01	30211502
UNSPSC 7.0901	39121004
UNSPSC 11	39121004
UNSPSC 12.01	39121004
UNSPSC 13.2	39121004
UNSPSC 18.0	39121004

Power supply unit - STEP-PS/ 1AC/24DC/4.2 - 2868664

Classifications

UNSPSC

UNSPSC 19.0	39121004
UNSPSC 20.0	39121004
UNSPSC 21.0	39121004

Approvals

Approvals

Approvals

DNV GL / NK / ABS / BSH / UL Listed / UL Recognized / cUL Recognized / IECEE CB Scheme / cUL Listed / EAC / EAC / cULus Recognized / cULus Listed

Ex Approvals

UL Listed / cUL Listed / cULus Listed

Approval details

DNV GL	https://approvalfinder.dnvgl.com/	TAA00001YD
NK	http://www.classnk.or.jp/hp/en/	09A024
ABS	http://www.eagle.org/eagleExternalPortalWEB/	18-HG1797199_PDA
BSH		Nr. 581
UL Listed	http://database.ul.com/cgi-bin/XYV/template/LISEXT/1FRAME/index.htm	FILE E 123528
UL Recognized	http://database.ul.com/cgi-bin/XYV/template/LISEXT/1FRAME/index.htm	FILE E 214596

Power supply unit - STEP-PS/ 1AC/24DC/4.2 - 2868664

Approvals

cUL Recognized	http://database.ul.com/cgi-bin/XYV/template/LISEXT/1FRAME/index.htm	FILE E 214596
IECEE CB Scheme	http://www.iecee.org/	DK-3955
cUL Listed	http://database.ul.com/cgi-bin/XYV/template/LISEXT/1FRAME/index.htm	FILE E 123528
EAC		EAC-Zulassung
EAC		RU*DE*08.B.01873/19
cULus Recognized		
cULus Listed		

Accessories

Accessories

Device protection

Type 3 surge protection device - PLT-SEC-T3-230-FM-UT - 2907919



Type 2/3 surge protection, consisting of protective plug and base element with screw connection. For single-phase power supply network with integrated status indicator and remote signaling. Nominal voltage 230 V AC/DC.

Power supply unit - STEP-PS/ 1AC/24DC/4.2 - 2868664

Accessories

Type 3 surge protection device - PLT-SEC-T3-24-FM-UT - 2907916



Type 3 surge protection, consisting of protective plug and base element, with integrated status indicator and remote signaling for single-phase power supply networks. Nominal voltage 24 V AC/DC.

Phoenix Contact 2021 © - all rights reserved
http://www.phoenixcontact.com