# D-SUB bus connector - SUBCON-PLUS-MODBUS/IL/BK - 2310808

Please be informed that the data shown in this PDF Document is generated from our Online Catalog. Please find the complete data in the user's documentation. Our General Terms of Use for Downloads are valid (http://phoenixcontact.com/download)



D-SUB connector, 9-pos., male connector, two cables to be fed in at 35°, bus system: for Inline Modbus RTU/ ASCII bus coupler termination resistance can be connected via slide switch, pin assignment: 3, 5, 6, 8; screw connection terminal blocks

## Your advantages

- Change to the D-SUB orientation through a reversible connection block

RoHS

## Key Commercial Data

| | |
|---|---|
| Packing unit | 1 pc |
| GTIN | 4 046356 124461 |
| GTIN | 4046356124461 |
| Weight per Piece (excluding packing) | 49.100 g |
| Custom tariff number | 85366990 |
| Country of origin | Germany |

## Technical data

### Dimensions

| | |
|---|---|
| Max. cable diameter | 10 mm |
| Min. cable diameter | 7.6 mm |
| Width | 16 mm |
| Height | 49.5 mm |
| Length | 60 mm |

### Ambient conditions

| | |
|---|---|
| Ambient temperature (operation) | -20 °C ... 75 °C |
| Ambient temperature (storage/transport) | -25 °C ... 80 °C |

# D-SUB bus connector - SUBCON-PLUS-MODBUS/IL/BK - 2310808

## Technical data

### Ambient conditions

| | |
|---|---|
| Altitude | ≤ 5000 m (For restrictions, see the manufacturer's declaration for altitude operation) |
| Degree of protection | IP40 |

### General

| | |
|---|---|
| Nominal voltage $U_N$ | 5 V |
| Nominal current $I_N$ | 100 mA |
| Signal | Modbus |
| Insertion/withdrawal cycles | > 200 |
| SUBCON fixing screws | 4-40 UNC |
| Tightening torque | 0.4 Nm |
| Housing material | ABS, metal-plated |
| Pin assignment | 3, 5, 6, 8 |

### Connection data

| | |
|---|---|
| Connection | D-SUB connection |
| Number of positions | 9 |
| Connection method | D-SUB connector |
| Termination resistor | 150 Ω (Can be connected externally) |
| | 470 Ω (Can be connected externally) |
| Connection | PCB connection |
| Connection method | Screw connection |
| Conductor cross section flexible min. | 0.14 mm² |
| Conductor cross section flexible max. | 1 mm² |
| Conductor cross section solid min. | 0.14 mm² |
| Conductor cross section solid max. | 1.5 mm² |
| Conductor cross section AWG min. | 26 |
| Conductor cross section AWG max. | 16 |
| Stripping length | 5 mm |
| Tightening torque | 0.4 Nm |

### Conformance/approvals

| | |
|---|---|
| Designation | EAC |
| Identification | EAC |
| Designation | Corrosive gas test |
| Identification | ISA-S71.04-1985 G3 Harsh Group A |

### Standards and Regulations

| | |
|---|---|
| Free from substances that could impair the application of coating | according to P-VW 3.10.7 57 65 0 VW-AUDI-Seat central standard |

# D-SUB bus connector - SUBCON-PLUS-MODBUS/IL/BK - 2310808

## Technical data

### Environmental Product Compliance

| | |
|---|---|
| REACh SVHC | Lead 7439-92-1 |
| China RoHS | Environmentally Friendly Use Period = 50 years |
| | For details about hazardous substances go to tab “Downloads”, Category “Manufacturer's declaration” |

## Drawings

Dimensional drawing

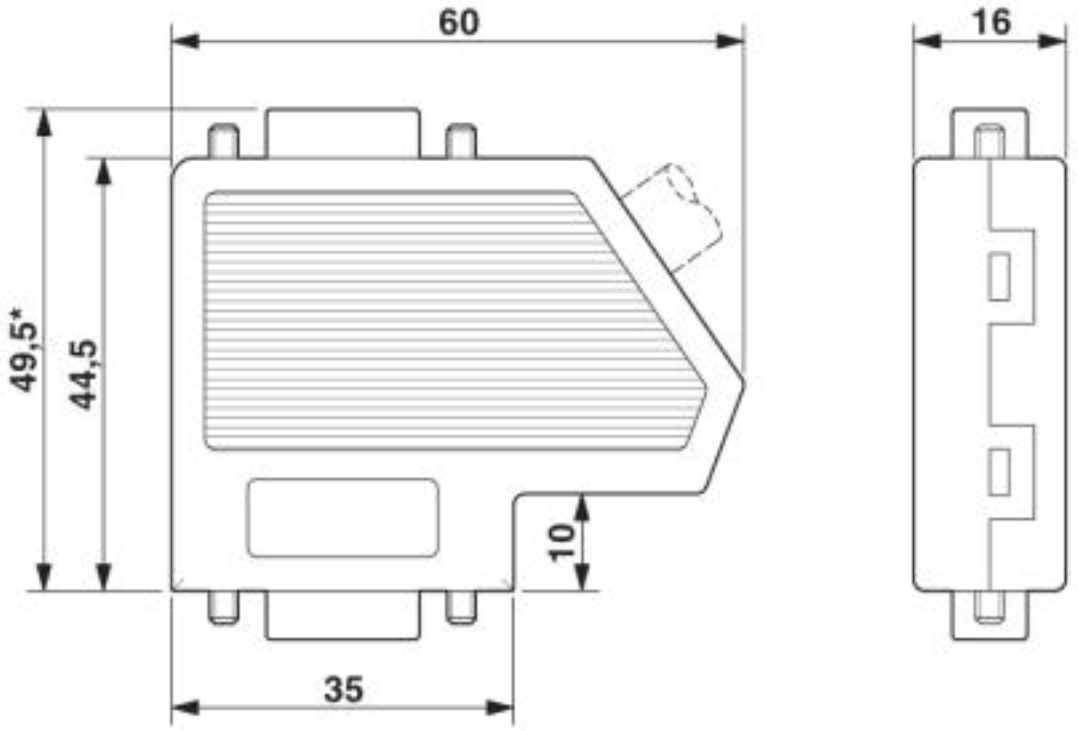


## Classifications

### eCl@ss

| | |
|---|---|
| eCl@ss 10.0.1 | 27440302 |
| eCl@ss 4.0 | 27140800 |
| eCl@ss 4.1 | 27140800 |
| eCl@ss 5.0 | 27143400 |
| eCl@ss 5.1 | 27143400 |
| eCl@ss 6.0 | 27143400 |
| eCl@ss 7.0 | 27440302 |

# D-SUB bus connector - SUBCON-PLUS-MODBUS/IL/BK - 2310808

## Classifications

### eCl@ss

| | |
|---|---|
| eCl@ss 8.0 | 27440302 |
| eCl@ss 9.0 | 27440302 |

### ETIM

| | |
|---|---|
| ETIM 2.0 | EC001132 |
| ETIM 3.0 | EC001132 |
| ETIM 4.0 | EC001132 |
| ETIM 5.0 | EC001132 |
| ETIM 6.0 | EC001132 |
| ETIM 7.0 | EC001132 |

### UNSPSC

| | |
|---|---|
| UNSPSC 6.01 | 30211802 |
| UNSPSC 7.0901 | 39121402 |
| UNSPSC 11 | 39121402 |
| UNSPSC 12.01 | 39121402 |
| UNSPSC 13.2 | 39121522 |
| UNSPSC 18.0 | 39121522 |
| UNSPSC 19.0 | 39121522 |
| UNSPSC 20.0 | 39121522 |
| UNSPSC 21.0 | 39121522 |

## Approvals

### Approvals

Approvals

UL Recognized / cUL Recognized / EAC / cULus Recognized

Ex Approvals

### Approval details

| | | | |
|---|---|---|---|
| UL Recognized | | http://database.ul.com/cgi-bin/XYV/template/LISEXT/1FRAME/index.htm | FILE E 238705 |

# D-SUB bus connector - SUBCON-PLUS-MODBUS/IL/BK - 2310808

## Approvals

| | | | |
|---|---|---|---|
| cUL Recognized | | http://database.ul.com/cgi-bin/XYV/template/LISEXT/1FRAME/index.htm | FILE E 238705 |
| EAC | | | EAC-Zulassung |
| cULus Recognized | | | |

## Accessories

### Accessories

### Data plug

D-SUB gender changer - VS-09-GC-BU/BU - 1688722



D-SUB contact insert, shell size 1, with nine signal contacts, type of contact socket, gender changer, fixing with 4-40 UNC thread

### I/O component

Bus coupler - IL MOD BK DI8 DO4-PAC - 2878696



Inline, Bus coupler, Modbus/RTU, D-SUB-9 female connector, Digital inputs: 8, 24 V DC, connection method: 3-wire, Digital outputs: 4, 24 V DC, 500 mA, connection method: 3-wire, transmission speed in the local bus: 500 kbps / 2 Mbps, degree of protection: IP20, including Inline connectors and marking fields

### Stripping tool

# D-SUB bus connector - SUBCON-PLUS-MODBUS/IL/BK - 2310808

## Accessories

Stripping pliers - QUICK WIREFOX 6 - 1204384



Stripping tool for cables with PVC insulation, stripping range: 0.08 to 6 mm², wire cutting up to 6 mm² flexible or 4 mm² rigid

Phoenix Contact 2020 © - all rights reserved
http://www.phoenixcontact.com