High Current Connectors - UHV240-AS/AS - 2130046

Please be informed that the data shown in this PDF Document is generated from our Online Catalog. Please find the complete data in the user's documentation. Our General Terms of Use for Downloads are valid (http://phoenixcontact.com/download)

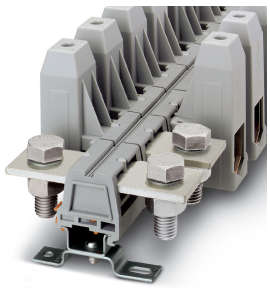

The figure shows a combination of versions UHV 240-AS/AS, UHV 240-KH/AS and UHV 240-KH/KH

Universal terminal block with bolt connection, cross section: 70 ... 240 mm², width: 53 mm, color: gray

Your advantages

- The UHV ... high-current connectors are available in several versions
- Versions are available with a cable lug or direct connection and there is a mixed version of both connection methods
- The comprehensive range of accessories, such as the connection rail for cross connection, ensures safe and user-friendly wiring of conductors up to 240 mm²

RoHS

Key Commercial Data

Packing unit	1 pc
GTIN	4 017918 052829
GTIN	4017918052829
Weight per Piece (excluding packing)	508.300 g
Custom tariff number	85369010
Country of origin	India

Technical data

General

Number of levels	1
Number of connections	2
Nominal cross section	240 mm²
Color	gray

High Current Connectors - UHV240-AS/AS - 2130046

Technical data

General

Insulating material	PA
Flammability rating according to UL 94	V0
Rated surge voltage	8 kV
Degree of pollution	3
Overvoltage category	III
Insulating material group	II
Maximum power dissipation for nominal condition	13.78 W
Ambient temperature (operation)	-60 °C ... 85 °C
Ambient temperature (storage/transport)	-25 °C ... 55 °C (for a short time, not exceeding 24 h, -60 °C to +70 °C)
Permissible humidity (storage/transport)	30 % ... 70 %
Ambient temperature (assembly)	-5 °C ... 70 °C
Ambient temperature (actuation)	-5 °C ... 70 °C
Connection in acc. with standard	IEC 60947-7-1
Nominal current I_N	415 A
Maximum load current	415 A (with 240 mm² conductor cross section)
Nominal voltage U_N	1000 V
Open side panel	No
Result of surge voltage test	Test passed
Result of power-frequency withstand voltage test	Test passed
Power frequency withstand voltage setpoint	2.2 kV
Result of the test for mechanical stability of terminal points (5 x conductor connection)	Test passed
Bending test rotation speed	10 rpm
Bending test turns	135
Result of tight fit on support	Test passed
Tight fit on carrier	NS 32/NS 35
Result of temperature-rise test	Test passed
Short circuit stability result	Test passed
Conductor cross section short circuit testing	240 mm²
Short-time current	28.8 kA
Result of thermal test	Test passed
Proof of thermal characteristics (needle flame) effective duration	30 s
Test specification, oscillation, broadband noise	DIN EN 50155 (VDE 0115-200):2008-03
Test spectrum	Service life test category 2, bogie-mounted
Test frequency	f_1 = 5 Hz to f_2 = 250 Hz
ASD level	6.12 $(m/s^2)^2$/Hz
Acceleration	3.12 g

High Current Connectors - UHV240-AS/AS - 2130046

Technical data

General

Test duration per axis	5 h
Test directions	X-, Y- and Z-axis
Shock form	Semi-sinusoidal
Acceleration	30g
Shock duration	18 ms
Number of shocks per direction	3
Test directions	X-, Y- and Z-axis (pos. and neg.)
Relative insulation material temperature index (Elec., UL 746 B)	120 °C
Temperature index of insulation material (DIN EN 60216-1 (VDE 0304-21))	125 °C
Static insulating material application in cold	-40 °C

Dimensions

Length	125 mm
Width	53 mm
Height NS 35/15	58 mm

Connection data

Connection method	Bolt connection
Cable lug connection according to standard	DIN 46234:1980-03
Min. cross section for cable lug connection	25 mm²
Max. cross section for cable lug connection	240 mm²
Hole diameter, min.	17 mm
Bolt diameter	16 mm
Screw thread	M16
Tightening torque, min	30 Nm
Tightening torque max	35 Nm
Cable lug connection according to standard	DIN 46235:1983-07
Min. cross section for cable lug connection	50 mm²
Max. cross section for cable lug connection	240 mm²
Hole diameter, min.	17 mm
Bolt diameter	16 mm
Screw thread	M16
Tightening torque, min	30 Nm
Tightening torque max	35 Nm
Stripping length	The stripping length depends on the specification provided by the cable lug manufacturer.
Power rail	40 mm x 5 mm

Standards and Regulations

High Current Connectors - UHV240-AS/AS - 2130046

Technical data

Standards and Regulations

Connection in acc. with standard	CSA
	IEC 60947-7-1
Flammability rating according to UL 94	V0

Environmental Product Compliance

China RoHS	Environmentally friendly use period: unlimited = EFUP-e
	No hazardous substances above threshold values

Drawings

Pictogram



Circuit diagram

Dimensional drawing

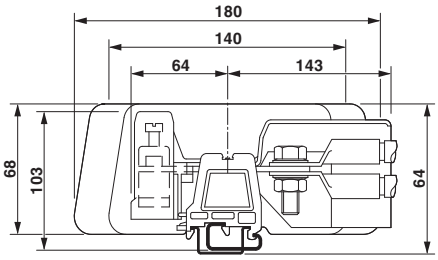

Schematic diagram

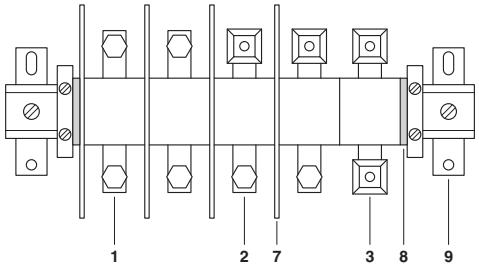

1 = high current connector, AS screw set on both sides
2 = high current connector, terminal sleeve KH on one side, screw set AS on the other side
3 = high current connector, terminal sleeves KH on both sides, for direct cable connection
7 = separating plate
8 = end piece
9 = flat bracket

High Current Connectors - UHV240-AS/AS - 2130046

Dimensional drawing

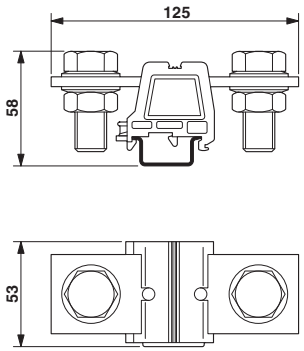

Classifications

eCl@ss

eCl@ss 10.0.1	27141120
eCl@ss 11.0	27141120
eCl@ss 4.0	27141100
eCl@ss 4.1	27141100
eCl@ss 5.0	27141100
eCl@ss 5.1	27141100
eCl@ss 6.0	27141100
eCl@ss 7.0	27141120
eCl@ss 8.0	27141120
eCl@ss 9.0	27141120

ETIM

ETIM 2.0	EC000897
ETIM 3.0	EC000897
ETIM 4.0	EC000897
ETIM 5.0	EC000897
ETIM 6.0	EC000897
ETIM 7.0	EC000897

UNSPSC

UNSPSC 6.01	30211811
UNSPSC 7.0901	39121410
UNSPSC 11	39121410
UNSPSC 12.01	39121410
UNSPSC 13.2	39121410
UNSPSC 18.0	39121410

High Current Connectors - UHV240-AS/AS - 2130046

Classifications

UNSPSC

UNSPSC 19.0	39121410
UNSPSC 20.0	39121410
UNSPSC 21.0	39121410

Approvals

Approvals

Approvals

CSA / UL Recognized / RS / EAC

Ex Approvals

Approval details

CSA		http://www.csagroup.org/services-industries/product-listing/	13631

	B	C
Nominal voltage UN	600 V	600 V
Nominal current IN	400 A	400 A
mm²/AWG/kcmil	500	500

UL Recognized		http://database.ul.com/cgi-bin/XYV/template/LISEXT/1FRAME/index.htm	FILE E 60425

	B	C
Nominal voltage UN	600 V	600 V
Nominal current IN	380 A	380 A
mm²/AWG/kcmil	500	500

RS		http://www.rs-head.spb.ru/en/index.php	17.00013.272

High Current Connectors - UHV240-AS/AS - 2130046

Approvals

EAC		RU C-DE.BL08.B.00540

Accessories

Accessories

Bridge

Connection rail - UHV240-VS 2 - 2130677



Connection rail, number of positions: 2, color: silver

Connection rail - UHV240-VS 3 - 2130680



Connection rail, number of positions: 3, color: silver

Connector

Ring cable lug - C-RC 25/M16 DIN - 3240104



Ring cable lug, non-insulated, 25 mm², M16

Ring cable lug - C-RC 35/M16 DIN - 3240109



Ring cable lug, non-insulated, 35 mm², M16

High Current Connectors - UHV240-AS/AS - 2130046

Accessories

Ring cable lug - C-RC 50/M16 DIN - 3240114



Ring cable lug, non-insulated, 50 mm², M16

Ring cable lug - C-RC 150/M16 DIN - 3240130



Ring cable lug, non-insulated, 150 mm², M16

Ring cable lug - C-RC 185/M16 DIN - 3240133



Ring cable lug, non-insulated, 185 mm², M16

Ring cable lug - C-RC 240/M16 DIN - 3240136



Ring cable lug, non-insulated, 240 mm², M16

Cover

Covering hood - UHV240-AH - 2130473



Covering hood, length: 137.4 mm, width: 49.8 mm, height: 77 mm, color: gray

---

High Current Connectors - UHV240-AS/AS - 2130046

Accessories

DIN rail

DIN rail perforated - NS 32 PERF 2000MM - 1201002



DIN rail perforated, G profile, width: 32 mm, height: 15 mm, acc. to EN 60715, material: Steel, galvanized, passivated with a thick layer, length: 2000 mm, color: silver

---

DIN rail, unperforated - NS 32 UNPERF 2000MM - 1201015



DIN rail, unperforated, G profile, width: 32 mm, height: 15 mm, acc. to EN 60715, material: Steel, galvanized, passivated with a thick layer, length: 2000 mm, color: silver

---

DIN rail perforated - NS 35/15 PERF 2000MM - 1201730



DIN rail perforated, Standard profile, width: 35 mm, height: 15 mm, similar to EN 60715, material: Steel, galvanized, passivated with a thick layer, length: 2000 mm, color: silver

---

DIN rail, unperforated - NS 35/15 UNPERF 2000MM - 1201714



DIN rail, unperforated, Standard profile, width: 35 mm, height: 15 mm, similar to EN 60715, material: Steel, galvanized, passivated with a thick layer, length: 2000 mm, color: silver

---

DIN rail perforated - NS 35/15 WH PERF 2000MM - 0806602



DIN rail perforated, Standard profile, width: 35 mm, height: 15 mm, similar to EN 60715, material: Steel, Galvanized, white passivated, length: 2000 mm, color: silver

---

High Current Connectors - UHV240-AS/AS - 2130046

Accessories

DIN rail, unperforated - NS 35/15 WH UNPERF 2000MM - 1204135



DIN rail, unperforated, Standard profile, width: 35 mm, height: 15 mm, similar to EN 60715, material: Steel, Galvanized, white passivated, length: 2000 mm, color: silver

---

DIN rail, unperforated - NS 35/15 AL UNPERF 2000MM - 1201756



DIN rail, unperforated, Standard profile, width: 35 mm, height: 15 mm, similar to EN 60715, material: Aluminum, uncoated, length: 2000 mm, color: silver

---

DIN rail perforated - NS 35/15 ZN PERF 2000MM - 1206599



DIN rail perforated, Standard profile, width: 35 mm, height: 15 mm, similar to EN 60715, material: Steel, galvanized, length: 2000 mm, color: silver

---

DIN rail, unperforated - NS 35/15 ZN UNPERF 2000MM - 1206586



DIN rail, unperforated, Standard profile, width: 35 mm, height: 15 mm, similar to EN 60715, material: Steel, galvanized, length: 2000 mm, color: silver

---

DIN rail, unperforated - NS 35/15 CU UNPERF 2000MM - 1201895



DIN rail, unperforated, Standard profile, width: 35 mm, height: 15 mm, similar to EN 60715, material: Copper, uncoated, length: 2000 mm, color: copper-colored

---

High Current Connectors - UHV240-AS/AS - 2130046

Accessories

End cap - NS 35/15 CAP - 1206573



DIN rail end piece, for DIN rail NS 35/15

DIN rail, unperforated - NS 35/15-2,3 UNPERF 2000MM - 1201798



DIN rail, unperforated, Standard profile 2.3 mm, width: 35 mm, height: 15 mm, acc. to EN 60715, material: Steel, galvanized, passivated with a thick layer, length: 2000 mm, color: silver

---

End block

End clamp - E/AL-NS 32 - 1201659



End clamp, for end support of UKH 50 - UKH 240, is pushed onto DIN rail NS 32 and fixed with 2 screws, width: 10 mm, color: Aluminum

---

End clamp - E/AL-NS 35 - 1201662



End clamp, for end support of UKH 50 to UKH 240, is pushed onto DIN rail NS 35 and fixed with 2 screws, width: 10 mm, color: aluminum

---

End clamp - CLIPFIX 15 - 3022263



Snap-on end bracket, to be snapped onto NS 15 DIN rail

High Current Connectors - UHV240-AS/AS - 2130046

Accessories

Labeled terminal marker

Zack marker strip - ZB 10 CUS - 0824941



Zack marker strip, can be ordered: Strip, white, labeled according to customer specifications, mounting type: snap into tall marker groove, for terminal block width: 10.2 mm, lettering field size: 10.15 x 10.5 mm, Number of individual labels: 10

Zack marker strip - ZB10,LGS:FORTL.ZAHLEN - 1053014



Zack marker strip, Strip, white, labeled, can be labeled with: CMS-P1-PLOTTER, printed horizontally: consecutive numbers 1 ... 10, 11 ... 20, etc. up to 91 ... 100, mounting type: snap into tall marker groove, for terminal block width: 10.2 mm, lettering field size: 10.15 x 10.5 mm, Number of individual labels: 10

Zack marker strip - ZB10,QR:FORTL.ZAHLEN - 1053027



Zack marker strip, Strip, white, labeled, can be labeled with: CMS-P1-PLOTTER, Printed vertically: consecutive numbers 1 ... 10, 11 ... 20, etc. up to 91 ... 100, mounting type: snap into tall marker groove, for terminal block width: 10.2 mm, lettering field size: 10.15 x 10.5 mm, Number of individual labels: 10

Marker for terminal blocks - ZB10,LGS:L1-N,PE - 1053412



Marker for terminal blocks, Strip, white, labeled, can be labeled with: CMS-P1-PLOTTER, horizontal: L1, L2, L3, N, PE, L1, L2, L3, N, PE, mounting type: snap into tall marker groove, for terminal block width: 10.2 mm, lettering field size: 10.15 x 10.5 mm, Number of individual labels: 10

Marker for terminal blocks - ZB10,LGS:U-N - 1053438



Marker for terminal blocks, Strip, white, labeled, can be labeled with: CMS-P1-PLOTTER, horizontal: U, V, W, N, GND, U, V, W, N, GND, mounting type: snap into tall marker groove, for terminal block width: 10.2 mm, lettering field size: 10.15 x 10.5 mm, Number of individual labels: 10

High Current Connectors - UHV240-AS/AS - 2130046

Accessories

Marker for terminal blocks - UC-TM 10 CUS - 0824605



Marker for terminal blocks, can be ordered: by sheet, white, labeled according to customer specifications, mounting type: snap into tall marker groove, for terminal block width: 10.2 mm, lettering field size: 9.6 x 10.5 mm, Number of individual labels: 48

Marker for terminal blocks - UCT-TM 10 CUS - 0829623



Marker for terminal blocks, can be ordered: by sheet, white, labeled according to customer specifications, mounting type: snap into tall marker groove, for terminal block width: 10.2 mm, lettering field size: 8.9 x 9.6 mm, Number of individual labels: 36

Mounting material

Insertion profile - UKH 150/240 EP - 3009244



Insertion profile, color: silver

Partition plate

Separating plate - UHV -TP2 - 2130415



Separating plate, length: 180.2 mm, width: 2 mm, height: 68.3 mm, color: gray

---

Terminal marking

High Current Connectors - UHV240-AS/AS - 2130046

Accessories

Marker card - SBS10:UNBEDRUCKT - 1007248



Marker card, Card, white, unlabeled, can be labeled with: Marker pen, perforated, mounting type: snap into tall marker groove, snap into flat marker groove, for terminal block width: 10 mm, lettering field size: 6 x 10.1 mm, Number of individual labels: 250

Zack marker strip - ZB 10:UNBEDRUCKT - 1053001



Zack marker strip, Strip, white, unlabeled, can be labeled with: PLOTMARK, CMS-P1-PLOTTER, mounting type: snap into tall marker groove, for terminal block width: 10.2 mm, lettering field size: 10.5 x 10.15 mm, Number of individual labels: 10

Marker for terminal blocks - UC-TM 10 - 0818069



Marker for terminal blocks, Sheet, white, unlabeled, can be labeled with: BLUEMARK ID COLOR, BLUEMARK ID, BLUEMARK CLED, PLOTMARK, CMS-P1-PLOTTER, mounting type: snap into tall marker groove, for terminal block width: 10.2 mm, lettering field size: 9.6 x 10.5 mm, Number of individual labels: 48

Marker for terminal blocks - UCT-TM 10 - 0829142



Marker for terminal blocks, Sheet, white, unlabeled, can be labeled with: TOPMARK NEO, TOPMARK LASER, BLUEMARK ID COLOR, BLUEMARK ID, BLUEMARK CLED, THERMOMARK PRIME, THERMOMARK CARD 2.0, THERMOMARK CARD, mounting type: snap into tall marker groove, for terminal block width: 10.2 mm, lettering field size: 8.9 x 9.6 mm, Number of individual labels: 36

Necessary add-on products

Flange cover - UHV -E - 2130428



Flange cover, length: 43.3 mm, width: 5.2 mm, color: gray

Phoenix Contact 2020 © - all rights reserved
http://www.phoenixcontact.com