High-current terminal block - UKH 240 - 3010217

Please be informed that the data shown in this PDF Document is generated from our Online Catalog. Please find the complete data in the user's documentation. Our General Terms of Use for Downloads are valid (http://phoenixcontact.com/download)



High-current terminal block, nom. voltage: 1000 V, nominal current: 415 A, connection method: Screw connection, number of connections: 2, cross section: 70 mm² - 240 mm², AWG: 2/0 - 500 kcmil, width: 36 mm, height: 123.6 mm, color: gray, mounting type: NS 35/15, NS 32

Your advantages

- Reliable cable connection is ensured by three-point centering of the conductor in the prismatic sleeve base
- Low contact resistance of the contact surface due to ribbing
- Screw locking by means of spring-loaded elements in the clamping part

Key Commercial Data

Packing unit	1 pc
GTIN	4 017918 091873
GTIN	4017918091873
Weight per Piece (excluding packing)	520.000 g
Custom tariff number	85369010
Country of origin	China

Technical data

General

Number of levels	1
Number of connections	2
Potentials	1
Nominal cross section	240 mm²
Color	gray
Insulating material	PA
Flammability rating according to UL 94	V0

High-current terminal block - UKH 240 - 3010217

Technical data

General

Rated surge voltage	8 kV
Degree of pollution	3
Overvoltage category	III
Insulating material group	I
Maximum power dissipation for nominal condition	13.78 W
Maximum load current	415 A (with 240 mm² conductor cross section)
Nominal current I_N	415 A
Nominal voltage U_N	1000 V
Open side panel	No
Ambient temperature (operation)	-60 °C ... 85 °C
Ambient temperature (storage/transport)	-25 °C ... 55 °C (For a short time, not exceeding 24 h, -60 to +70 °C)
Moisture, minimum (storage/transport)	30 %
Moisture, maximum (storage/transport)	70 %
Ambient temperature (assembly)	-5 °C ... 70 °C
Ambient temperature (actuation)	-5 °C ... 70 °C
Shock protection test specification	DIN EN 50274 (VDE 0660-514):2002-11
Back of the hand protection	guaranteed
Finger protection	guaranteed
Note regarding shock protection	Finger-safe protection is not guaranteed if bridges are positioned.
Result of surge voltage test	Test passed
Result of power-frequency withstand voltage test	Test passed
Power frequency withstand voltage setpoint	2.2 kV
Result of the test for mechanical stability of terminal points (5 x conductor connection)	Test passed
Result of bending test	Test passed
Bending test rotation speed	10 rpm
Bending test turns	135
Result of tight fit on support	Test passed
Tight fit on carrier	NS 32/NS 35
Result of temperature-rise test	Test passed
Short circuit stability result	Test passed
Conductor cross section short circuit testing	240 mm²
Short-time current	28.8 kA
Result of thermal test	Test passed
Ageing test for screwless modular terminal block temperature cycles	192
Proof of thermal characteristics (needle flame) effective duration	30 s
Test specification, oscillation, broadband noise	DIN EN 50155 (VDE 0115-200):2008-03

High-current terminal block - UKH 240 - 3010217

Technical data

General

Test spectrum	Service life test category 2, bogie-mounted
Test frequency	f_1 = 5 Hz to f_2 = 250 Hz
ASD level	6.12 $(m/s^2)^2$/Hz
Acceleration	3.12 g
Test duration per axis	5 h
Test directions	X-, Y- and Z-axis
Shock form	Semi-sinusoidal
Acceleration	30g
Shock duration	18 ms
Number of shocks per direction	3
Test directions	X-, Y- and Z-axis (pos. and neg.)
Relative insulation material temperature index (Elec., UL 746 B)	130 °C
Temperature index of insulation material (DIN EN 60216-1 (VDE 0304-21))	130 °C
Static insulating material application in cold	-60 °C
Surface flammability NFPA 130 (ASTM E 162)	passed
Specific optical density of smoke NFPA 130 (ASTM E 662)	passed
Smoke gas toxicity NFPA 130 (SMP 800C)	passed
Calorimetric heat release NFPA 130 (ASTM E 1354)	28 MJ/kg
Fire protection for rail vehicles (DIN EN 45545-2) R22	HL 1 - HL 3
Fire protection for rail vehicles (DIN EN 45545-2) R23	HL 1 - HL 3
Fire protection for rail vehicles (DIN EN 45545-2) R24	HL 1 - HL 3
Fire protection for rail vehicles (DIN EN 45545-2) R26	HL 1 - HL 3

Dimensions

Width	36 mm
Length	100 mm
Height	123.6 mm
Height NS 35/15	131.5 mm
Height NS 32	129 mm

Connection data

Note	Screws with hexagonal socket
Connection method	Screw connection
Screw thread	M10
Stripping length	40 mm
Tightening torque, min	25 Nm
Tightening torque max	30 Nm
Connection in acc. with standard	IEC 60947-7-1

High-current terminal block - UKH 240 - 3010217

Technical data

Connection data

Note	Note: Product releases, connection cross sections and notes on connecting aluminum cables can be found in the download area.
Conductor cross section solid min.	70 mm²
Conductor cross section solid max.	240 mm²
Conductor cross section AWG min.	2/0
Conductor cross section AWG max.	500 kcmil
Conductor cross section flexible min.	70 mm²
Conductor cross section flexible max.	240 mm²
Min. AWG conductor cross section, flexible	2/0
Max. AWG conductor cross section, flexible	500 kcmil
Conductor cross section flexible, with ferrule without plastic sleeve min.	70 mm²
Conductor cross section flexible, with ferrule without plastic sleeve max.	185 mm²
Conductor cross section flexible, with ferrule with plastic sleeve min.	70 mm²
Conductor cross section flexible, with ferrule with plastic sleeve max.	185 mm²
Cross section with insertion bridge, solid max.	240 mm²
Cross section with insertion bridge, stranded max.	185 mm²
2 conductors with same cross section, solid min.	35 mm²
2 conductors with same cross section, solid max.	95 mm²
2 conductors with same cross section, stranded min.	50 mm²
2 conductors with same cross section, stranded max.	95 mm²
Two conductors with the same cross section stranded, with ferrule and without plastic sleeve, minimum	35 mm²
Two conductors with the same cross section stranded, with ferrule and without plastic sleeve, maximum	50 mm²
Connection in acc. with standard	IEC/EN 60079-7
Conductor cross section solid min.	70 mm²
Conductor cross section solid max.	240 mm²
Conductor cross section AWG min.	2/0
Conductor cross section AWG max.	500
Conductor cross section flexible min.	70 mm²
Conductor cross section flexible max.	185 mm²
Internal cylindrical gage	B15

Standards and Regulations

Connection in acc. with standard	CSA
	IEC 60947-7-1
Flammability rating according to UL 94	V0

Environmental Product Compliance

High-current terminal block - UKH 240 - 3010217

Technical data

Environmental Product Compliance

REACh SVHC	Lead 7439-92-1
China RoHS	Environmentally Friendly Use Period = 50 years
	For details about hazardous substances go to tab “Downloads”, Category “Manufacturer's declaration”

Drawings

Dimensional drawing

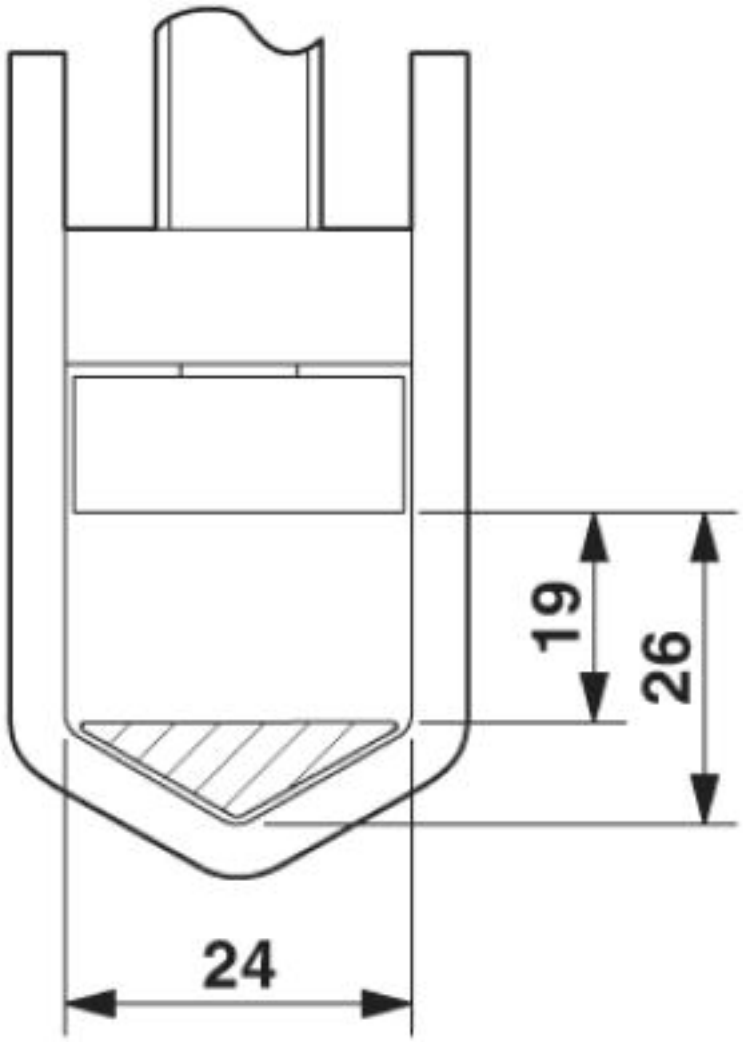

High-current terminal block - UKH 240 - 3010217

Circuit diagram



Schematic diagram

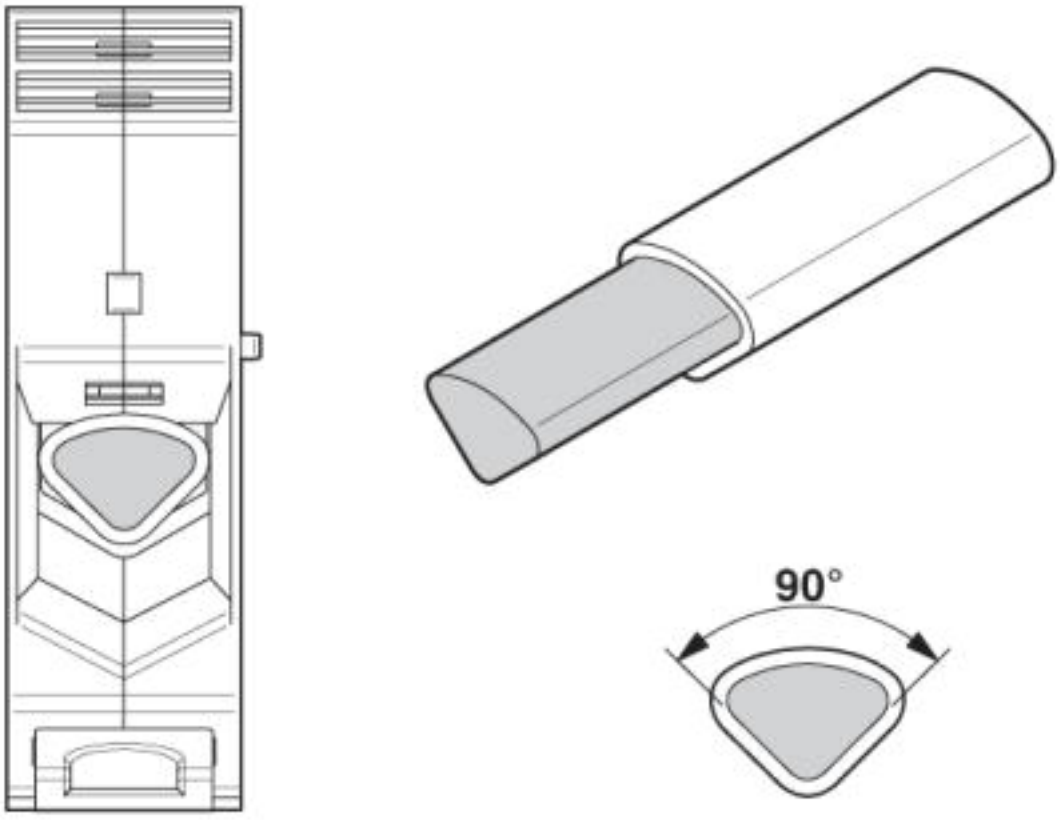

Connecting aluminum cables. Further notes can be found in the download area

Classifications

eCl@ss

eCl@ss 10.0.1	27141120
eCl@ss 4.0	27141100
eCl@ss 4.1	27141100
eCl@ss 5.0	27141100
eCl@ss 5.1	27141100
eCl@ss 6.0	27141100

High-current terminal block - UKH 240 - 3010217

Classifications

eCl@ss

eCl@ss 7.0	27141120
eCl@ss 8.0	27141120
eCl@ss 9.0	27141120

ETIM

ETIM 2.0	EC000897
ETIM 3.0	EC000897
ETIM 4.0	EC000897
ETIM 5.0	EC000897
ETIM 6.0	EC000897
ETIM 7.0	EC000897

UNSPSC

UNSPSC 6.01	30211811
UNSPSC 7.0901	39121410
UNSPSC 11	39121410
UNSPSC 12.01	39121410
UNSPSC 13.2	39121410
UNSPSC 18.0	39121410
UNSPSC 19.0	39121410
UNSPSC 20.0	39121410
UNSPSC 21.0	39121410

Approvals

Approvals

Approvals

DNV GL / CSA / PRS / UL Recognized / EAC / RS / LR

Ex Approvals

IECEx / ATEX / UL Recognized / cUL Recognized / EAC Ex / cULus Recognized

Approval details

High-current terminal block - UKH 240 - 3010217

Approvals

DNV GL	https://approvalfinder.dnvgl.com/	TAE00001CT

CSA	http://www.csagroup.org/services-industries/product-listing/	13631

	B	C
Nominal voltage UN	600 V	600 V
Nominal current IN	400 A	400 A
mm²/AWG/kcmil	500	500

PRS	http://www.prs.pl/	TE/2156/880590/17

UL Recognized	http://database.ul.com/cgi-bin/XYV/template/LISEXT/1FRAME/index.htm	FILE E 60425

	B	C
Nominal voltage UN	600 V	600 V
Nominal current IN	380 A	380 A
mm²/AWG/kcmil	500	500

EAC		RU C-DE.AI30.B.01102

RS	http://www.rs-head.spb.ru/en/index.php	17.00013.272

LR	http://www.lr.org/en	88/20086

Accessories

Accessories

High-current terminal block - UKH 240 - 3010217

Accessories

DIN rail

DIN rail perforated - NS 32 PERF 2000MM - 1201002



DIN rail perforated, G profile, width: 32 mm, height: 15 mm, acc. to EN 60715, material: Steel, galvanized, passivated with a thick layer, length: 2000 mm, color: silver

---

DIN rail, unperforated - NS 32 UNPERF 2000MM - 1201015



DIN rail, unperforated, G profile, width: 32 mm, height: 15 mm, acc. to EN 60715, material: Steel, galvanized, passivated with a thick layer, length: 2000 mm, color: silver

---

DIN rail perforated - NS 35/15 PERF 2000MM - 1201730



DIN rail perforated, Standard profile, width: 35 mm, height: 15 mm, similar to EN 60715, material: Steel, galvanized, passivated with a thick layer, length: 2000 mm, color: silver

---

DIN rail, unperforated - NS 35/15 UNPERF 2000MM - 1201714



DIN rail, unperforated, Standard profile, width: 35 mm, height: 15 mm, similar to EN 60715, material: Steel, galvanized, passivated with a thick layer, length: 2000 mm, color: silver

---

DIN rail perforated - NS 35/15 WH PERF 2000MM - 0806602



DIN rail perforated, Standard profile, width: 35 mm, height: 15 mm, similar to EN 60715, material: Steel, Galvanized, white passivated, length: 2000 mm, color: silver

---

High-current terminal block - UKH 240 - 3010217

Accessories

DIN rail, unperforated - NS 35/15 WH UNPERF 2000MM - 1204135



DIN rail, unperforated, Standard profile, width: 35 mm, height: 15 mm, similar to EN 60715, material: Steel, Galvanized, white passivated, length: 2000 mm, color: silver

---

DIN rail, unperforated - NS 35/15 AL UNPERF 2000MM - 1201756



DIN rail, unperforated, Standard profile, width: 35 mm, height: 15 mm, similar to EN 60715, material: Aluminum, uncoated, length: 2000 mm, color: silver

---

DIN rail perforated - NS 35/15 ZN PERF 2000MM - 1206599



DIN rail perforated, Standard profile, width: 35 mm, height: 15 mm, similar to EN 60715, material: Steel, galvanized, length: 2000 mm, color: silver

---

DIN rail, unperforated - NS 35/15 ZN UNPERF 2000MM - 1206586



DIN rail, unperforated, Standard profile, width: 35 mm, height: 15 mm, similar to EN 60715, material: Steel, galvanized, length: 2000 mm, color: silver

---

DIN rail, unperforated - NS 35/15 CU UNPERF 2000MM - 1201895



DIN rail, unperforated, Standard profile, width: 35 mm, height: 15 mm, similar to EN 60715, material: Copper, uncoated, length: 2000 mm, color: copper-colored

---

High-current terminal block - UKH 240 - 3010217

Accessories

End cap - NS 35/15 CAP - 1206573



DIN rail end piece, for DIN rail NS 35/15

End block

End clamp - E/AL-NS 32 - 1201659



End clamp, for end support of UKH 50 - UKH 240, is pushed onto DIN rail NS 32 and fixed with 2 screws, width: 10 mm, color: Aluminum

End clamp - E/AL-NS 35 - 1201662



End clamp, for end support of UKH 50 to UKH 240, is pushed onto DIN rail NS 35 and fixed with 2 screws, width: 10 mm, color: aluminum

Insertion bridge

Insertion bridge - EB 3-36/UKH - 0201414



Insertion bridge, pitch: 36 mm, number of positions: 3, color: gray

Insertion bridge - EB 2-36/UKH - 0201401



Insertion bridge, pitch: 36 mm, number of positions: 2, color: gray

High-current terminal block - UKH 240 - 3010217

Accessories

Labeled terminal marker

Warning label - WS-2K - 1004513



Adhesive warning plate, self-adhesive, black print: lightning flash with mixed verson - "Vorsicht Spannung - Attention Danger" size of label: 32 x 26 mm

Zack marker strip - ZB 22 CUS - 0824949



Zack marker strip, can be ordered: Strip, white, labeled according to customer specifications, mounting type: snap into tall marker groove, for terminal block width: 22 mm, lettering field size: 10.5 x 21.8 mm, Number of individual labels: 4

Zack marker strip - ZB 22,LGS:L1-N,PE - 0811875



Zack marker strip, Strip, white, labeled, printed horizontally: L1, L2, L3, N, PE, mounting type: snap into tall marker groove, for terminal block width: 22 mm, lettering field size: 10.5 x 21.8 mm, Number of individual labels: 4

Mounting material

Insertion profile - UKH 150/240 EP - 3009244



Insertion profile, color: silver

Pick-off terminal block

High-current terminal block - UKH 240 - 3010217

Accessories

Pick-off terminal block - AGK 10-UKH 150/240 - 3003554



Pick-off terminal block, Can only be used in conjunction with UKH 150/240, nom. voltage: 1000 V, nominal current: 57 A, connection method: Screw connection, number of connections: 1, cross section: 0.5 mm² - 10 mm², AWG: 20 - 8, width: 10.2 mm, height: 34.7 mm, color: gray, mounting type: on base element

Socket spanner

Screwdriver - SF-THEX 8-200 - 1212643



T-handle screwdriver, for Allen screws, hexagonal (with chamfer), size: hex 8 x 200 mm, ergonomically shaped handle, matt chrome-plated

Terminal marking

Zack marker strip - ZB 22:UNBEDRUCKT - 0811862



Zack marker strip, Strip, white, unlabeled, can be labeled with: PLOTMARK, CMS-P1-PLOTTER, mounting type: snap into tall marker groove, for terminal block width: 22 mm, lettering field size: 10.5 x 21.8 mm, Number of individual labels: 4

Phoenix Contact 2020 © - all rights reserved
http://www.phoenixcontact.com