Product data sheet

Specifications



variable speed drive, Altivar 212, 11kW, 15hp, 480V, 3 phases, with EMC, IP21

ATV212HD11N4

Main

Device short name	ATV212
Product destination	Asynchronous motors
Network number of phases	3 phases
Motor power kW	11 kW
Motor power hp	15 hp
Supply voltage limits	323…528 V
Supply frequency	50...60 Hz - 5...5 %
Line current	16.8 A at 480 V 21.1 A at 380 V
Range of product	Altivar 212
Product or component type	Variable speed drive
Product specific application	Pumps and fans in HVAC
Communication port protocol	METASYS N2 APOGEE FLN LonWorks BACnet Modbus
[Us] rated supply voltage	380...480 V - 15...10 %
EMC filter	Class C2 EMC filter integrated
IP degree of protection	IP21

Complementary

Apparent power	17.1 kVA at 380 V
Continuous output current	22.5 A at 380 V 22.5 A at 460 V
Maximum transient current	24.8 A for 60 s
Speed drive output frequency	0.5…200 Hz
Speed range	1…10
Speed accuracy	+/- 10 % of nominal slip 0.2 Tn to Tn
Local signalling	1 LED (red) for DC bus energized
Output voltage	<= power supply voltage
Isolation	Electrical between power and control
Type of cable	Without mounting kit: 1 wire(s)IEC cable at 45 °C, copper 90 °C / XLPE/EPR

Disclaimer: This documentation is not intended as a substitute for and is not to be used for determining suitability or reliability of these products for specific user applications

	Without mounting kit: 1 wire(s)IEC cable at 45 °C, copper 70 °C / PVC With UL Type 1 kit: 3 wire(s)UL 508 cable at 40 °C, copper 75 °C / PVC
Electrical connection	VIA, VIB, FM, FLA, FLB, FLC, RY, RC, F, R, RES: terminal 2.5 mm² / AWG 14 L1/R, L2/S, L3/T: terminal 16 mm² / AWG 6
Tightening torque	0.6 N.m (VIA, VIB, FM, FLA, FLB, FLC, RY, RC, F, R, RES) 2.5 N.m, 22 lb.in (L1/R, L2/S, L3/T)
Supply	Internal supply for reference potentiometer (1 to 10 kOhm): 10.5 V DC +/- 5 %, <10 A, protection type: overload and short-circuit protection Internal supply: 24 V DC (21…27 V), <200 A, protection type: overload and short-circuit protection
Sampling duration	2 ms +/- 0.5 ms F discrete 2 ms +/- 0.5 ms R discrete 2 ms +/- 0.5 ms RES discrete 3.5 ms +/- 0.5 ms VIA analog 22 ms +/- 0.5 ms VIB analog
Response time	FM 2 ms, tolerance +/- 0.5 ms for analog output(s) FLA, FLC 7 ms, tolerance +/- 0.5 ms for discrete output(s) FLB, FLC 7 ms, tolerance +/- 0.5 ms for discrete output(s) RY, RC 7 ms, tolerance +/- 0.5 ms for discrete output(s)
Accuracy	+/- 0.6 % (VIA) for a temperature variation 60 °C +/- 0.6 % (VIB) for a temperature variation 60 °C +/- 1 % (FM) for a temperature variation 60 °C
Linearity error	VIA: +/- 0.15 % of maximum value for input VIB: +/- 0.15 % of maximum value for input FM: +/- 0.2 % for output
Analogue output type	FM switch-configurable voltage 0...10 V DC, impedance: 7620 Ohm, resolution 10 bits FM switch-configurable current 0...20 mA, impedance: 970 Ohm, resolution 10 bits
Discrete output type	Configurable relay logic: (FLA, FLC) NO - 100000 cycles Configurable relay logic: (FLB, FLC) NC - 100000 cycles Configurable relay logic: (RY, RC) NO - 100000 cycles
Minimum switching current	3 mA at 24 V DC for configurable relay logic
Maximum switching current	5 A at 250 V AC on resistive load - cos phi = 1 - L/R = 0 ms (FL, R) 5 A at 30 V DC on resistive load - cos phi = 1 - L/R = 0 ms (FL, R) 2 A at 250 V AC on inductive load - cos phi = 0.4 - L/R = 7 ms (FL, R) 2 A at 30 V DC on inductive load - cos phi = 0.4 - L/R = 7 ms (FL, R)
Discrete input type	F programmable 24 V DC, with level 1 PLC, impedance: 4700 Ohm R programmable 24 V DC, with level 1 PLC, impedance: 4700 Ohm RES programmable 24 V DC, with level 1 PLC, impedance: 4700 Ohm
Discrete input logic	Positive logic (source) (F, R, RES), <= 5 V (state 0), >= 11 V (state 1) Negative logic (sink) (F, R, RES), >= 16 V (state 0), <= 10 V (state 1)
Dielectric strength	3535 V DC between earth and power terminals 5092 V DC between control and power terminals
Insulation resistance	>= 1 mOhm 500 V DC for 1 minute
Frequency resolution	Display unit: 0.1 Hz Analog input: 0.024/50 Hz
Communication service	Read holding registers (03) 2 words maximum Time out setting from 0.1 to 100 s Write single register (06) Monitoring inhibitable Write multiple registers (16) 2 words maximum Read device identification (43)
Option card	Communication card for LonWorks
Power dissipation in W	430 W
Air flow	147 m3/h
Functionality	Mid
Specific application	HVAC
Variable speed drive application selection	Building - HVAC compressor for scroll Building - HVAC fan Building - HVAC pump
Motor power range AC-3	7…11 kW at 380…440 V 3 phases 7…11 kW at 480…500 V 3 phases
Motor starter type	Variable speed drive
Discrete output number	2
Analogue input number	2

Analogue input type	VIA switch-configurable voltage: 0...10 V DC 24 V max, impedance: 30000 Ohm, resolution 10 bits VIB configurable voltage: 0...10 V DC 24 V max, impedance: 30000 Ohm, resolution 10 bits VIB configurable PTC probe: 0...6 probes, impedance: 1500 Ohm VIA switch-configurable current: 0...20 mA, impedance: 250 Ohm, resolution 10 bits
Analogue output number	1
Physical interface	2-wire RS 485
Connector type	1 open style 1 RJ45
Transmission rate	9600 bps or 19200 bps
Transmission frame	RTU
Number of addresses	1…247
Data format	8 bits, 1 stop, odd even or no configurable parity
Type of polarization	No impedance
Asynchronous motor control profile	Voltage/frequency ratio, 2 points Voltage/frequency ratio, automatic IR compensation (U/f + automatic Uo) Flux vector control without sensor, standard Voltage/frequency ratio - Energy Saving, quadratic U/f Voltage/frequency ratio, 5 points
Torque accuracy	+/- 15 %
Transient overtorque	120 % of nominal motor torque +/- 10 % for 60 s
Acceleration and deceleration ramps	Automatic based on the load Linear adjustable separately from 0.01 to 3200 s
Motor slip compensation	Not available in voltage/frequency ratio motor control Adjustable Automatic whatever the load
Switching frequency	6...16 kHz adjustable 12...16 kHz with derating factor
Nominal switching frequency	12 kHz
Braking to standstill	By DC injection
Network frequency	47.5...63 Hz
Prospective line Isc	22 kA
Protection type	Overheating protection: drive Thermal power stage: drive Short-circuit between motor phases: drive Input phase breaks: drive Overcurrent between output phases and earth: drive Overvoltages on the DC bus: drive Break on the control circuit: drive Against exceeding limit speed: drive Line supply overvoltage and undervoltage: drive Line supply undervoltage: drive Against input phase loss: drive Thermal protection: motor Motor phase break: motor With PTC probes: motor
Width	180 mm
Height	232 mm
Depth	170 mm
Net weight	6.45 kg

Environment

Pollution degree	2 conforming to IEC 61800-5-1 IP20 on upper part without blanking plate on cover conforming to EN/IEC 61800-5-1 IP20 on upper part without blanking plate on cover conforming to EN/IEC 60529 IP21 conforming to EN/IEC 61800-5-1 IP21 conforming to EN/IEC 60529 IP41 on upper part conforming to EN/IEC 61800-5-1 IP41 on upper part conforming to EN/IEC 60529
Vibration resistance	1.5 mm (f= 3…13 Hz) conforming to EN/IEC 60068-2-6 1 gn (f= 13…200 Hz) conforming to EN/IEC 60068-2-8

Shock resistance	15 gn for 11 ms conforming to IEC 60068-2-27
Environmental characteristic	Classes 3C1 conforming to IEC 60721-3-3 Classes 3S2 conforming to IEC 60721-3-3
Noise level	51 dB conforming to 86/188/EEC
Operating altitude	1000...3000 m limited to 2000 m for the Corner Grounded distribution network with current derating 1 % per 100 m <= 1000 m without derating
Relative humidity	5…95 % without condensation conforming to IEC 60068-2-3 5…95 % without dripping water conforming to IEC 60068-2-3
Ambient air temperature for operation	-10…40 °C (without derating) 40…50 °C (with derating factor)
Operating position	Vertical +/- 10 degree
Product certifications	C-Tick NOM 117 CSA UL
Marking	CE
Standards	EN 61800-3 category C2 EN 61800-3 environments 1 category C2 IEC 61800-3 category C3 EN 61800-3 environments 1 category C3 IEC 61800-3 environments 2 category C3 UL Type 1 IEC 61800-3 environments 1 category C1 IEC 61800-3 environments 1 category C3 EN 61800-3 environments 2 category C3 EN 61800-3 environments 2 category C2 EN 61800-3 IEC 61800-3 category C2 EN 61800-3 environments 1 category C1 EN 61800-5-1 EN 55011 class A group 1 IEC 61800-3 environments 2 category C2 EN 61800-3 category C3 IEC 61800-5-1 EN 61800-3 environments 2 category C1 IEC 61800-3 IEC 61800-3 environments 1 category C2 IEC 61800-3 environments 2 category C1
Assembly style	With heat sink
Electromagnetic compatibility	Electrostatic discharge immunity test level 3 conforming to IEC 61000-4-2 Radiated radio-frequency electromagnetic field immunity test level 3 conforming to IEC 61000-4-3 Electrical fast transient/burst immunity test level 4 conforming to IEC 61000-4-4 1.2/50 µs - 8/20 µs surge immunity test level 3 conforming to IEC 61000-4-5 Conducted radio-frequency immunity test level 3 conforming to IEC 61000-4-6 Voltage dips and interruptions immunity test conforming to IEC 61000-4-11
Regulation loop	Adjustable PI regulator
Ambient air temperature for storage	-25…70 °C

Packing Units

Unit Type of Package 1	PCE
Number of Units in Package 1	1
Package 1 Height	27.000 cm
Package 1 Width	30.000 cm
Package 1 Length	23.000 cm
Package 1 Weight	6.117 kg
Unit Type of Package 2	P06
Number of Units in Package 2	10
Package 2 Height	75.000 cm
Package 2 Width	60.000 cm
Package 2 Length	80.000 cm

Package 2 Weight	74.170 kg

Offer Sustainability

Sustainable offer status	Green Premium product
REACh Regulation	REACh Declaration
EU RoHS Directive	Pro-active compliance (Product out of EU RoHS legal scope) EU RoHS Declaration
Mercury free	Yes
China RoHS Regulation	China RoHS declaration
RoHS exemption information	Yes
Circularity Profile	End of Life Information
WEEE	The product must be disposed on European Union markets following specific waste collection and never end up in rubbish bins
California proposition 65	WARNING: This product can expose you to chemicals including: Lead and lead compounds, which is known to the State of California to cause cancer and birth defects or other reproductive harm. For more information go to www.P65Warnings.ca.gov

Contractual warranty

Warranty	18 months

Dimensions

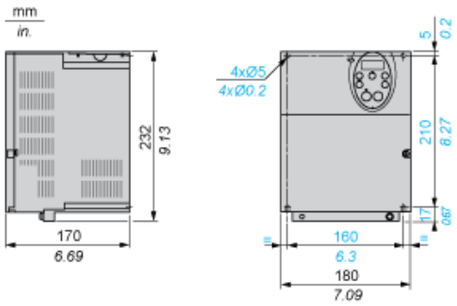

Plate for EMC mounting (supplied with the drive)

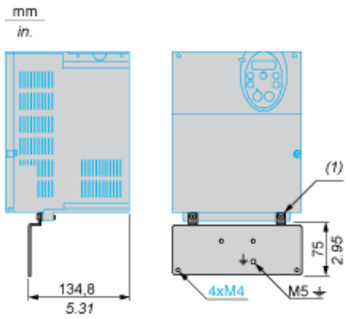

(1) 2 x M5 screws

Mounting Recommendations

Clearance

Depending on the conditions in which the drive is to be used, its installation will require certain precautions and the use of appropriate accessories.

Install the unit vertically:

- Do not place it close to heating elements.
- Leave sufficient free space to ensure that the air required for cooling purposes can circulate from bottom to the top of the unit.

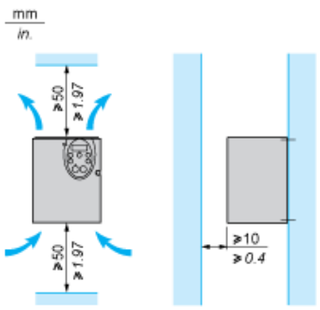

Mounting Types

Type A mounting

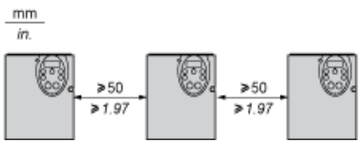

Type B mounting

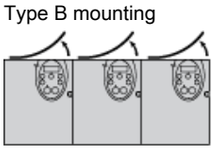

Type C mounting

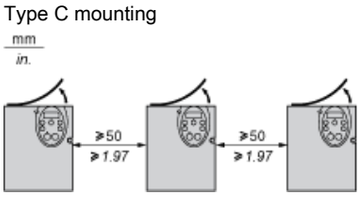

By removing the protective blanking cover from the top of the drive, the degree of protection for the drive becomes IP21. The protective blanking cover may vary according to the drive model, see opposite.

Specific Recommendations for Mounting in an Enclosure

To help ensure proper air circulation in the drive:

- Fit ventilation grilles.
- Check that there is sufficient ventilation. If there is not, install a forced ventilation unit with a filter. The openings and/or fans must provide a flow rate a
- Use special filters with UL Type 12/IP54 protection.
- Remove the blanking cover from the top of the drive.

Sealed Metal Enclosure (IP54 Degree of Protection)

The drive must be mounted in a dust and damp proof enclosure in certain environmental conditions, such as dust, corrosive gases, high humidity with risk of condensation and dripping water, splashing liquid, etc.This enables the drive to be used in an enclosure where the maximum internal temperature reaches 50°C.

Recommended Wiring Diagram

3-Phase Power Supply

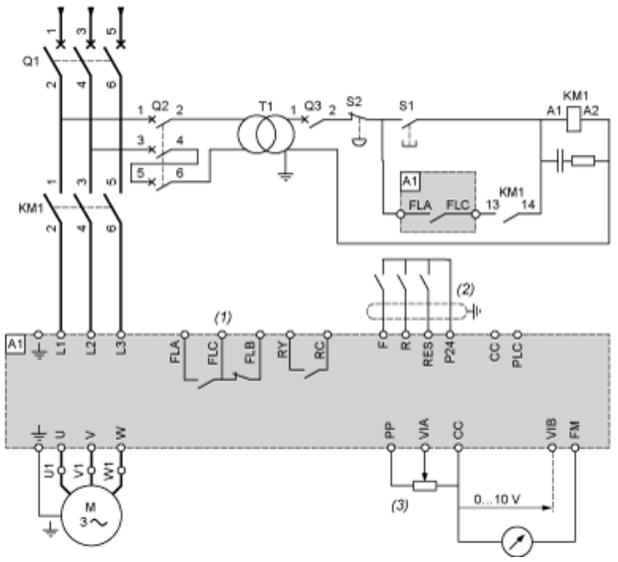

A1: ATV 212 drive
KM1: Contactor
Q1: Circuit breaker
Q2: GV2 L rated at twice the nominal primary current of T1
Q3: GB2CB05
S1, S2: XB4 B or XB5 A pushbuttons
T1: 100 VA transformer 220 V secondary
(1) Fault relay contacts for remote signalling of the drive status
(2) Connection of the common for the logic inputs depends on the positioning of the switch (Source, PLC, Sink)
(3) Reference potentiometer SZ1RV1202

NOTE: All terminals are located at the bottom of the drive. Install interference suppressors on all inductive circuits near the drive or connected on the same circuit, such as relays, contactors, solenoid valves, fluorescent lighting, etc.

Switches (Factory Settings)

Voltage/current selection for analog I/O (VIA and VIB)



Voltage/current selection for analog I/O (FM)



Selection of logic type

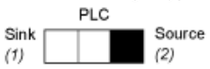

(1) negative logic
(2) positive logic

Other Possible Wiring Diagrams

Logic Inputs According to the Position of the Logic Type Switch

"Source" position

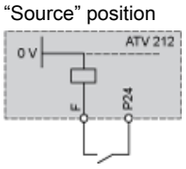

"Sink" position

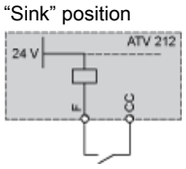

"PLC" position with PLC transistor outputs	
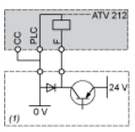	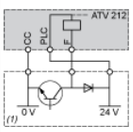
(1) PLC	**(1)** PLC

2-wire control

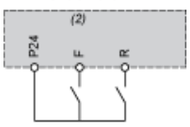

F: Forward
R: Preset speed
(2) ATV 212 control terminals

3-wire control

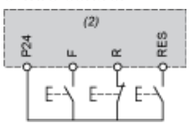

F: Forward
R: Stop
RES: Reverse
(2) ATV 212 control terminals

PTC probe

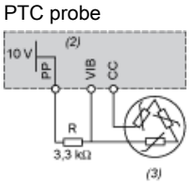

(2) ATV 212 control terminals
(3) Motor

Analog Inputs

Voltage analog inputs

External +10 V	
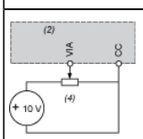	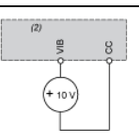
(2) ATV 212 control terminals **(4)** Speed reference potentiometer 2.2 to 10 kΩ	**(2)** ATV 212 control terminals

Analog input configured for current: 0-20 mA, 4-20 mA, X-Y mA

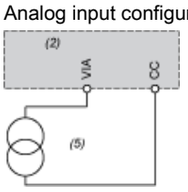

(2) ATV 212 control terminals
(5) Source 0-20 mA, 4-20 mA, X-Y mA

Analog input VIA configured as positive logic input (“Source” position)



(2) ATV 212 control terminals

Analog input VIA configured as negative logic input (“Sink” position)

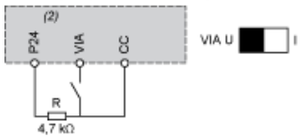

(2) ATV 212 control terminals

Derating Curves

The derating curves for the drive nominal current (In) depend on the temperature, the switching frequency and the mounting type (A, B or C).
For intermediate temperatures (45°C for example), interpolate between 2 curves.

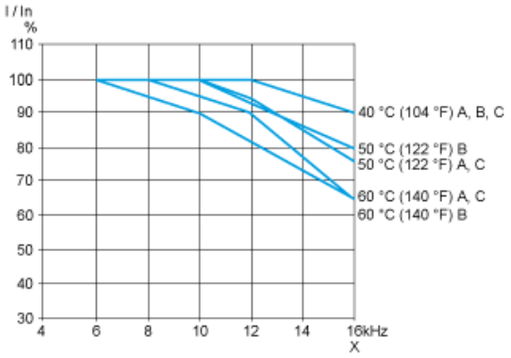

X Switching frequency

Recommended replacement(s)