Product data sheet
Characteristics

ATV630U55N4
variable speed drive ATV630 - 5.5kW/7.5HP - 380...480V - IP21/UL type 1

The information provided in this documentation contains general descriptions and/or technical characteristics of the performance of the products contained herein.
This documentation is not intended as a substitute for and is not to be used for determining suitability or reliability of these products for specific user applications.
It is the duty of any such user or integrator to perform the appropriate and complete risk analysis, evaluation and testing of the products with respect to the relevant specific application or use thereof.
Neither Schneider Electric Industries SAS nor any of its affiliates or subsidiaries shall be responsible or liable for misuse of the information contained herein.



Main

Range of product	Altivar Process ATV600
Product or component type	Variable speed drive
Product specific application	Process and utilities
Device short name	ATV630
Variant	Standard version
Product destination	Asynchronous motors Synchronous motors
Mounting mode	Wall mount
EMC filter	Integrated EN/IEC 61800-3 category C2 50 m Integrated EN/IEC 61800-3 category C3 150 m
IP degree of protection	IP21 IEC 61800-5-1 IP21 IEC 60529
Degree of protection	UL type 1 UL 508C
Type of cooling	Forced convection
Supply frequency	50...60 Hz - 5...5 %
Network number of phases	3 phases
[Us] rated supply voltage	380...480 V - 15...10 %
Motor power kW	5.5 kW normal duty 4 kW heavy duty
Motor power hp	7.5 hp normal duty 5 hp heavy duty
Line current	10.4 A 380 V normal duty 9.1 A 480 V normal duty 8 A 380 V heavy duty 7.2 A 480 V heavy duty
Prospective line Isc	50 kA
Apparent power	7.6 kVA 480 V normal duty 6 kVA 480 V heavy duty
Continuous output current	12.7 A 4 kHz normal duty 9.3 A 4 kHz heavy duty
Maximum transient current	14 A 60 s normal duty 14 A 60 s heavy duty
Asynchronous motor control profile	Constant torque standard Variable torque standard Optimized torque mode
Synchronous motor control profile	Permanent magnet motor
Output frequency	0.0001...0.5 kHz
Nominal switching frequency	4 kHz
Switching frequency	2...12 kHz adjustable 4...12 kHz with derating factor
Safety function	STO (safe torque off) SIL 3
Discrete input logic	16 preset speeds

Communication port protocol	Ethernet Modbus serial Modbus TCP
Option card	Communication module Profibus DP V1 slot A Communication module Profinet slot A Communication module DeviceNet slot A Communication module Modbus TCP/EtherNet/IP slot A Communication module CANopen daisy chain RJ45 slot A Communication module CANopen SUB-D 9 slot A Communication module CANopen screw terminals slot A Digital and analog I/O extension module slot A/slot B Output relay extension module slot A/slot B Communication module Ethernet IP/Modbus TCP/ MD-Link slot A

Complementary

Output voltage	<= power supply voltage
Permissible temporary current boost	1.1 x In 60 s normal duty 1.5 x In 60 s heavy duty
Motor slip compensation	Adjustable Automatic whatever the load Can be suppressed Not available in permanent magnet motor law
Acceleration and deceleration ramps	Linear adjustable separately from 0.01 to 9000 s S, U or customized
Braking to standstill	By DC injection
Protection type	Thermal protection motor Safe torque off motor Motor phase break motor Thermal protection drive Safe torque off drive Overheating drive Overcurrent between output phases and earth drive Overload of output voltage drive Short-circuit protection drive Motor phase break drive Overvoltages on the DC bus drive Line supply overvoltage drive Line supply undervoltage drive Line supply phase loss drive Overspeed drive Break on the control circuit drive
Frequency resolution	0.1 Hz display unit 0.012/50 Hz analog input
Electrical connection	Removable screw terminals 0.5...1.5 mm² AWG 20...AWG 16 control Screw terminal 4...6 mm² AWG 12...AWG 10 motor Screw terminal 2.5...6 mm² AWG 14...AWG 10 line side
Type of connector	RJ45 Ethernet/Modbus TCP on the remote graphic terminal RJ45 Modbus serial on the remote graphic terminal
Physical interface	2-wire RS 485 Modbus serial
Transmission frame	RTU Modbus serial
Transmission rate	10/100 Mbit/s Ethernet IP/Modbus TCP 4.8, 9.6, 19.2, 38.4 kbit/s Modbus serial
Exchange mode	Half duplex, full duplex, autonegotiation Ethernet/Modbus TCP
Data format	8 bits, configurable odd, even or no parity Modbus serial
Type of polarization	No impedance Modbus serial
Number of addresses	1...247 Modbus serial
Method of access	Slave Modbus TCP
Supply	External supply for digital inputs 24 V DC 19...30 V <= 1.25 mA overload and short-circuit protection Internal supply for reference potentiometer (1 to 10 kOhm) 10.5 V DC +/- 5 % <= 10 mA overload and short-circuit protection Internal supply for digital inputs and STO 24 V DC 21...27 V <= 200 mA overload and short-circuit protection

Local signalling	3 LEDs local diagnostic 3 LEDs dual colour embedded communication status 4 LEDs dual colour communication module status 1 LED red presence of voltage
Width	144 mm
Height	350 mm
Depth	203 mm
Product weight	4.7 kg
Analogue input number	3
Analogue input type	Software-configurable voltage AI1, AI2, AI3 0...10 V DC 30 kOhm 12 bits Software-configurable current AI1, AI2, AI3 0...20 mA 250 Ohm 12 bits
Discrete input number	8
Discrete input type	Programmable DI1...DI6 24 V DC <= 30 V 3.5 kOhm Programmable as pulse input DI5, DI6 0...30 kHz 24 V DC <= 30 V Safe torque off STOA, STOB 24 V DC <= 30 V > 2.2 kOhm
Input compatibility	Level 1 PLC EN/IEC 61131-2 DI1...DI6 discrete input Level 1 PLC IEC 65A-68 DI5, DI6 discrete input Level 1 PLC EN/IEC 61131-2 STOA, STOB discrete input
Discrete input logic	Positive logic (source) DI1...DI6 < 5 V > 11 V Negative logic (sink) DI1...DI6 > 16 V < 10 V Positive logic (source) DI5, DI6 < 0.6 V > 2.5 V Positive logic (source) STOA, STOB < 5 V > 11 V
Analogue output number	2
Analogue output type	Software-configurable voltage AO1, AO2 0...10 V DC 470 Ohm 10 bits Software-configurable current AO1, AO2 0...20 mA 10 bits
Sampling duration	2 ms +/- 0.5 ms DI1...DI4 discrete input 5 ms +/- 1 ms DI5, DI6 discrete input 5 ms +/- 0.1 ms AI1, AI2, AI3 analog input 10 ms +/- 1 ms AO1 analog output
Accuracy	+/- 0.6 % AI1, AI2, AI3 for a temperature variation 60 °C analog input +/- 1 % AO1, AO2 for a temperature variation 60 °C analog output
Linearity error	+/- 0.15 % of maximum value analog input AI1, AI2, AI3 +/- 0.2 % analog output AO1, AO2
Relay output number	3
Relay output type	Configurable relay logic R1 fault relay NO/NC 100000 cycles Configurable relay logic R2 sequence relay NO 100000 cycles Configurable relay logic R3 sequence relay NO 100000 cycles
Refresh time	5 ms +/- 0.5 ms R1, R2, R3 relay output
Minimum switching current	5 mA 24 V DC R1, R2, R3 relay output
Maximum switching current	3 A 250 V AC resistive 1 R1, R2, R3 relay output 3 A 30 V DC resistive 1 R1, R2, R3 relay output 2 A 250 V AC inductive 0.4 7 ms R1, R2, R3 relay output 2 A 30 V DC inductive 0.4 7 ms R1, R2, R3 relay output
Isolation	Between power and control terminals
Specific application	Utility
IP degree of protection	IP21

Environment

Insulation resistance	> 1 mOhm 500 V DC for 1 minute to earth
Noise level	54.5 dB 86/188/EEC
Power dissipation in W	36 W natural convection 380 V 4 kHz 145 W forced convection 380 V 4 kHz
Volume of cooling air	38 m3/h
Operating position	Vertical +/- 10 degree
THDI	<= 48 % full load IEC 61000-3-12
Electromagnetic compatibility	Electrostatic discharge immunity test level 3 IEC 61000-4-2 Radiated radio-frequency electromagnetic field immunity test level 3 IEC 61000-4-3 Electrical fast transient/burst immunity test level 4 IEC 61000-4-4 1.2/50 µs - 8/20 µs surge immunity test level 3 IEC 61000-4-5 Conducted radio-frequency immunity test level 3 IEC 61000-4-6
Pollution degree	2 EN/IEC 61800-5-1
Vibration resistance	1.5 mm peak to peak 2...13 Hz IEC 60068-2-6 1 gn 13...200 Hz IEC 60068-2-6

Shock resistance	15 gn 11 ms IEC 60068-2-27
Relative humidity	5...95 % without condensation IEC 60068-2-3
Ambient air temperature for operation	-15...50 °C without derating 50...60 °C with derating factor
Ambient air temperature for storage	-40...70 °C
Operating altitude	<= 1000 m without derating 1000...4800 m with current derating 1 % per 100 m
Environmental characteristic	Chemical pollution resistance class 3C3 EN/IEC 60721-3-3 Dust pollution resistance class 3S3 EN/IEC 60721-3-3
Standards	UL 508C EN/IEC 61800-3 EN/IEC 61800-3 environment 1 category C2 EN/IEC 61800-3 environment 2 category C3 EN/IEC 61800-5-1 IEC 61000-3-12 IEC 60721-3 IEC 61508 IEC 13849-1
Product certifications	ATEX INERIS ATEX zone 2/22 CSA TÜV UL REACH DNV-GL
Marking	CE
Discrete and process manufacturing	Building - HVAC : compressor Building - HVAC : compressor centrifugal Food and beverage processing : other application Mining mineral and metal : fan Mining mineral and metal : pump Oil and gas : compressor Oil and gas : fan Oil and gas : pump Others : compressor Water and waste water : other application
Power range	4...6 kW
Voltage range	380...440 V 480...500 V
Network number of phases	3 phases

Offer Sustainability

Sustainable offer status	Green Premium product
RoHS (date code: YYWW)	Compliant - since 1444 - Schneider Electric declaration of conformity
REACh	Reference contains SVHC above the threshold - go to CaP for more details
Product environmental profile	Available Download Product Environmental
Product end of life instructions	Available Download End Of Life Manual

Dimensions

Views: Right - Front

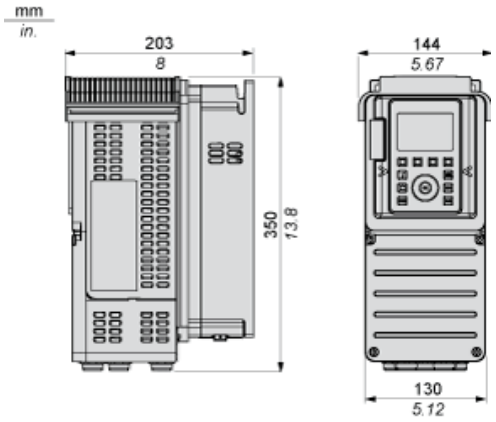

Drives Without IP21 Top Cover

Views: Left - Rear

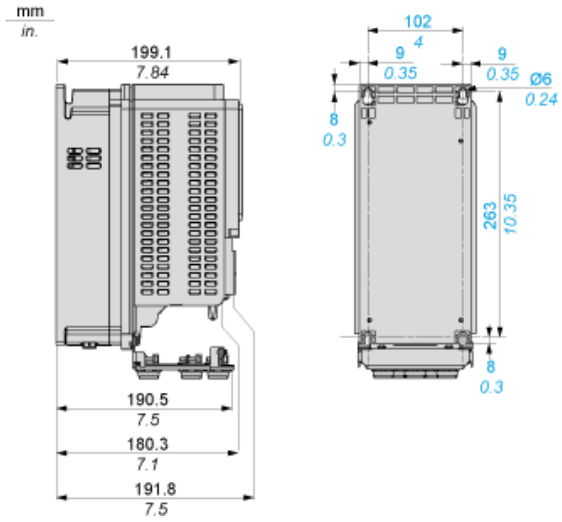

Drives Without IP21 Top Cover

Views: Left - Rear

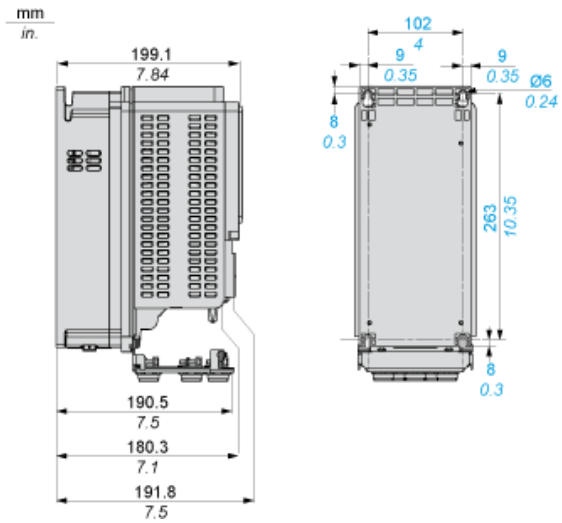

Clearances

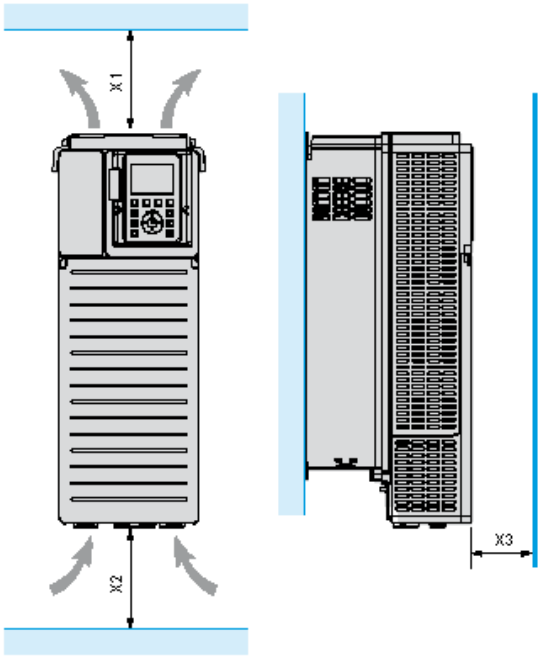

X1	X2	X3
≥ 100 mm (3.94 in.)	≥ 100 mm (3.94 in.)	≥ 10 mm (0.39 in.)

Mounting Types

Mounting Type A: Individual IP21

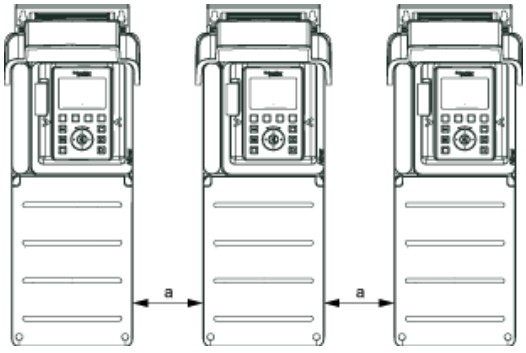

a ≥ 100 mm (3.94 in.)

Mounting Type B: Side by Side IP20

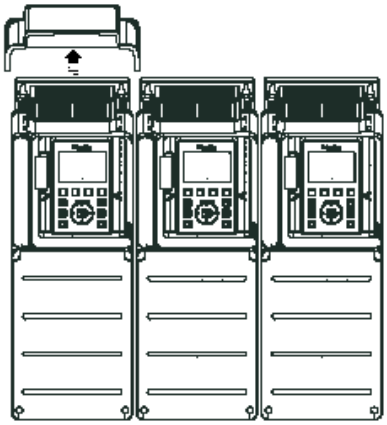

Mounting Type C: Individual IP20

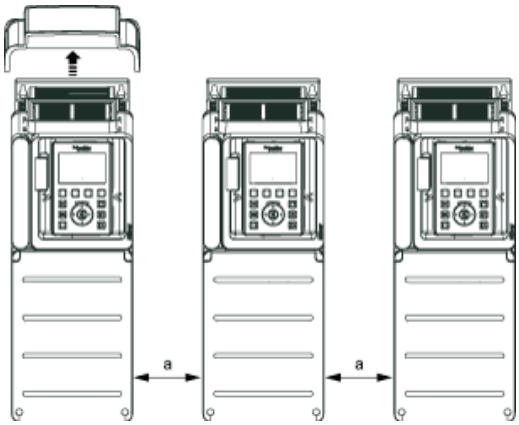

a ≥ 0

Single or Three-Phase Power Supply with Upstream Breaking via Line Contactor

Connection diagrams conforming to standards EN 954-1 category 1 and IEC/EN 61508 capacity SIL1, stopping category 0 in accordance with standard IEC/EN 60204-1

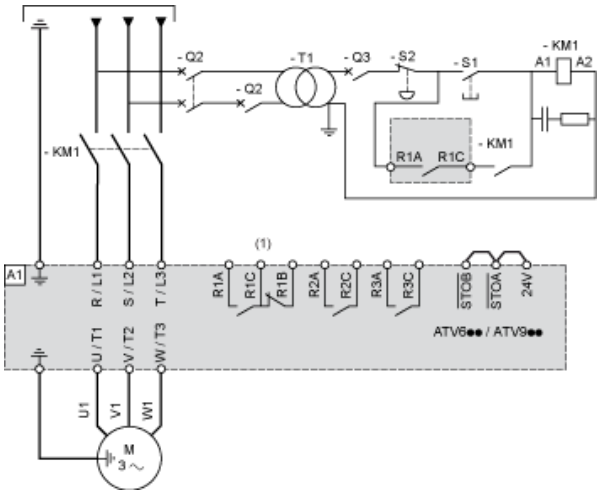

(1) Use digital output R1 set to operating state Fault to switch Off the product once an error is detected.
A1 : Drive
KM1 Line Contactor
Q2, Circuit breakers
Q3 :
S1, Pushbuttons
S2 :
T1 : Transformer for control part

Single or Three-Phase Power Supply with Downstream Breaking via Switch Disconnector

Connection diagrams conforming to standards EN 954-1 category 1 and IEC/EN 61508 capacity SIL1, stopping category 0 in accordance with standard IEC/EN 60204-1

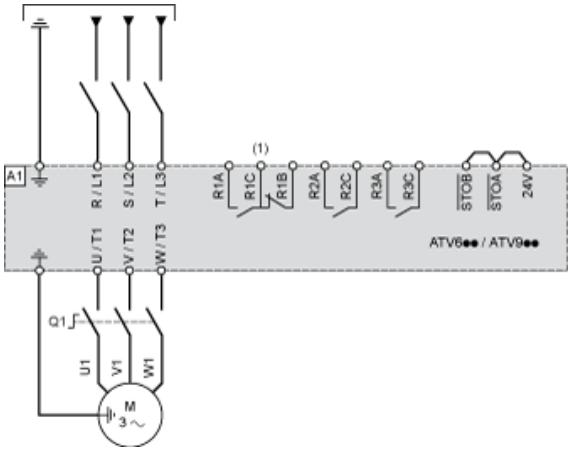

(1) Use digital output R1 set to operating state Fault to switch Off the product once an error is detected.
A1 : Drive
Q1 : Switch disconnector

Control Block Wiring Diagram

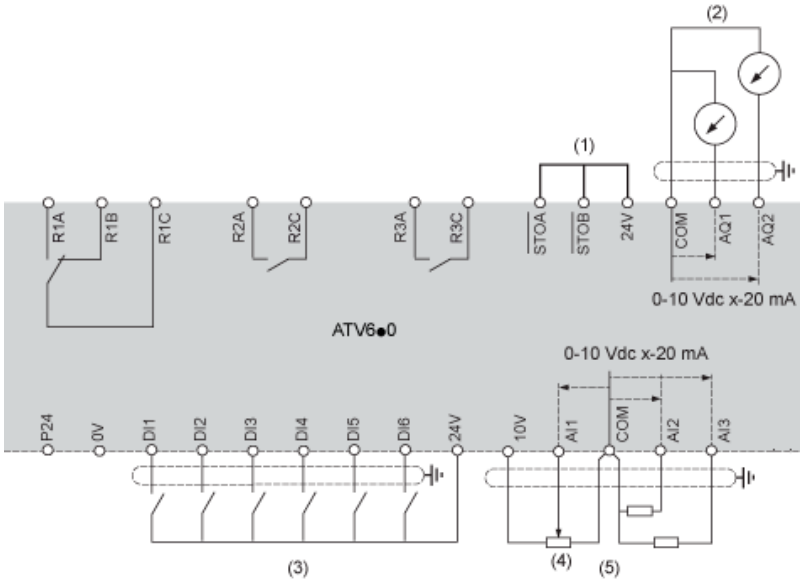

(1) Safe Torque Off
(2) Analog Output
(3) Digital Input
(4) Reference potentiometer
(5) Analog Input
A1 : ATV6.. Drive
R1A, Fault relay
R1B,
R1C :
R2A, Sequence relay
R2C :
R3A, Sequence relay
R3C :

Sensor Connection

It is possible to connect either 1 or 3 sensors on terminals AI2 or AI3.

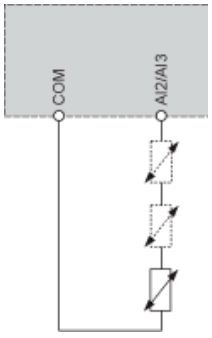

Sink / Source Switch Configuration

The switch is used to adapt the operation of the logic inputs to the technology of the programmable controller outputs.

- Set the switch to Source (factory setting) if using PLC outputs with PNP transistors.
- Set the switch to Ext if using PLC outputs with NPN transistors.

Switch Set to SRC (Source) Position Using the Output Power Supply for the Digital Inputs

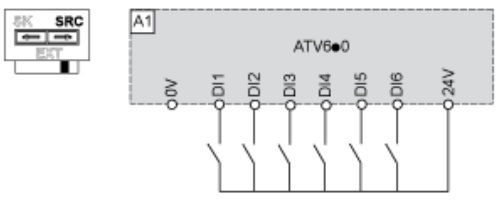

Switch Set to SRC (Source) Position and Use of an External Power Supply for the DIs

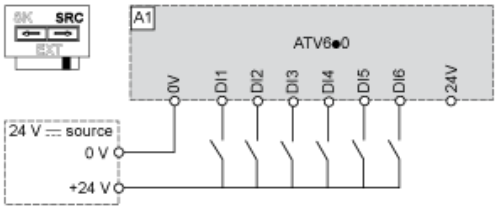

Switch Set to SK (Sink) Position Using the Output Power Supply for the Digital Inputs

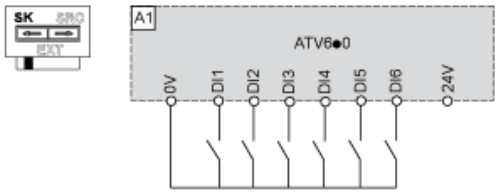

Switch Set to EXT Position Using an External Power Supply for the DIs

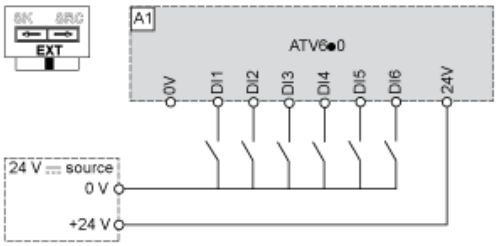

Derating Curves

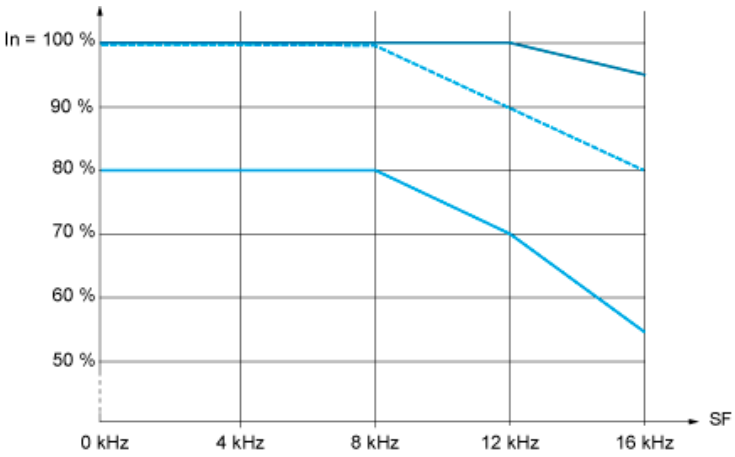

40 °C (104 °F) - Mounting type A, B and C
50 °C (122 °F) - Mounting type A, B and C
60 °C (140 °F) - Mounting type B and C
In : Nominal Drive Current
SF : Switching Frequency