Product data sheet
Characteristics

TM3DM24R
Discrete I/O module, Modicon TM3, 24 IO (16 inputs, 8 relay outputs, screw) 24 VDC

Product availability : Stock - Normally stocked in distribution facility



Main

Range of product	Modicon TM3
Product or component type	Discrete I/O module
Range compatibility	Modicon M241 Modicon M251 Modicon M221 Modicon M262
Discrete input number	16 input IEC 61131-2 Type 1
Discrete input logic	Sink or source (positive/negative)
Discrete input voltage	24 V
Discrete input current	7 mA input
Discrete output type	Relay normally open
Discrete output number	8
Discrete output logic	Positive or negative
Discrete output voltage	24 V DC relay output 240 V AC relay output
Discrete output current	2000 mA relay output

Complementary

Discrete I/O number	24
Current consumption	5 mA 5 V DC via bus connector at state off) 0 mA 24 V DC via bus connector at state on) 0 mA 24 V DC via bus connector at state off) 65 mA 5 V DC via bus connector at state on)
Discrete input voltage type	DC
Voltage state 1 guaranteed	15...28.8 V input
Current state 1 guaranteed	>= 2.5 mA input)
Voltage state 0 guaranteed	0...5 V input

* Price is “List Price” and may be subject to a trade discount – check with your local distributor or retailer for actual price.

Disclaimer: This documentation is not intended as a substitute for and is not to be used for determining suitability or reliability of these products for specific user applications

Current state 0 guaranteed	<= 1 mA input)
Input impedance	3.4 kOhm
Response time	4 ms (turn-on) 4 ms (turn-off)
Maximum current per output common	7 A
Mechanical durability	20000000 cycles
Minimum load	10 mA 5 V DC relay output
Local signalling	for I/O state 1 LED per channel (green)
Electrical connection	17 x 1.5 mm² removable screw terminal block pitch 3.81 mm for inputs 11 x 1.5 mm² removable screw terminal block pitch 3.81 mm for outputs
Maximum cable distance between devices	Unshielded cable <98.43 ft (30 m) regular input
Insulation	Between input and internal logic 500 V AC Non-insulated between inputs Between input groups and output groups 1500 V AC Between open contact 750 V AC Between output and internal logic 500 V AC Non-insulated between outputs
Marking	CE
Mounting support	Top hat type TH35-15 rail IEC 60715 Top hat type TH35-7.5 rail IEC 60715 plate or panel with fixing kit
Height	3.54 in (90 mm)
Depth	3.33 in (84.6 mm)
Width	1.69 in (42.9 mm)

Environment

Standards	EN/IEC 61131-2 EN/IEC 61010-2-201
Product certifications	CULus C-tick
Resistance to electrostatic discharge	8 kV in air EN/IEC 61000-4-2 4 kV on contact EN/IEC 61000-4-2
Resistance to electromagnetic fields	9.14 V/m (10 V/m) 80 MHz...1 GHz EN/IEC 61000-4-3 2.74 V/m (3 V/m) 1.4 GHz...2 GHz EN/IEC 61000-4-3 0.91 V/m (1 V/m) 2 GHz...3 GHz EN/IEC 61000-4-3
Resistance to magnetic fields	98.43 A/m (30 A/m) 50/60 Hz EN/IEC 61000-4-8
Resistance to fast transients	1 kV I/OEN/IEC 61000-4-4 2 kV relay outputEN/IEC 61000-4-4
Surge withstand	2 kV output common mode EN/IEC 61000-4-5 1 kV input common mode EN/IEC 61000-4-5
Resistance to conducted disturbances	10 V 0.15...80 MHz EN/IEC 61000-4-6 3 V spot frequency (2, 3, 4, 6.2, 8.2, 12.6, 16.5, 18.8, 22, 25 MHz) Marine specification (LR, ABS, DNV, GL)
Electromagnetic emission	Radiated emissions 40 dBµV/m QP class A 10 m)30…230 MHz EN/IEC 55011 Radiated emissions 47 dBµV/m QP class A 10 m)230…1000 MHz EN/IEC 55011
Ambient air temperature for operation	14…95 °F (-10…35 °C) vertical installation 14…131 °F (-10…55 °C) horizontal installation
Ambient air temperature for storage	-13…158 °F (-25…70 °C)
Relative humidity	10…95 %, without condensation in operation) 10…95 %, without condensation in storage)
IP degree of protection	IP20 with protective cover in place
Pollution degree	2
Operating altitude	0...6561.68 ft (0...2000 m)
Storage altitude	0.00…9842.52 ft (0…3000 m)
Vibration resistance	3.5 mm 5…8.4 Hz DIN rail 3 gn 8.4…150 Hz DIN rail 3.5 mm 5…8.4 Hz panel 3 gn 8.4…150 Hz panel
Shock resistance	15 gn 11 ms

Ordering and shipping details

Category	22533 - M2XX PLC & ACCESSORIES
Discount Schedule	MSX
GTIN	00785901349099
Nbr. of units in pkg.	1
Package weight(Lbs)	0.59 lb(US) (0.27 kg)
Returnability	Yes
Country of origin	TW

Packing Units

Package 1 Height	2.95 in (75.000 mm)
Package 1 width	4.13 in (105.000 mm)
Package 1 Length	4.92 in (125.000 mm)

Offer Sustainability

Sustainable offer status	Green Premium product
California proposition 65	WARNING: This product can expose you to chemicals including: Lead and lead compounds, which is known to the State of California to cause cancer and birth defects or other reproductive harm. For more information go to www.P65Warnings.ca.gov
REACh Regulation	REACh Declaration
REACh free of SVHC	Yes
EU RoHS Directive	Pro-active compliance (Product out of EU RoHS legal scope) EU RoHS Declaration
Toxic heavy metal free	Yes
Mercury free	Yes
RoHS exemption information	Yes
China RoHS Regulation	China RoHS declaration
Environmental Disclosure	Product Environmental Profile
Circularity Profile	End of Life Information
WEEE	The product must be disposed on European Union markets following specific waste collection and never end up in rubbish bins.
PVC free	Yes

Dimensions

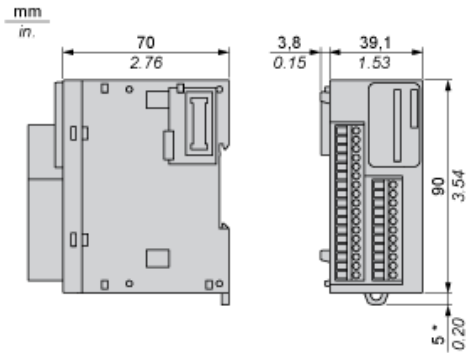

(*) 8.5 mm/0.33 in. when the clamp is pulled out.

Spacing Requirements

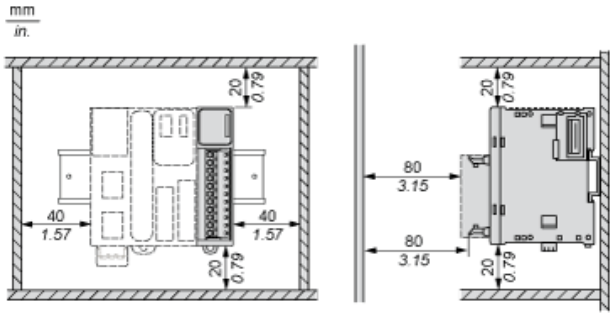

Mounting on a Rail

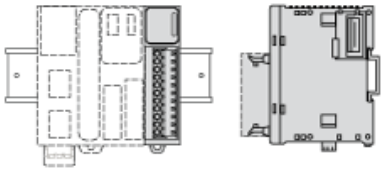

Incorrect Mounting

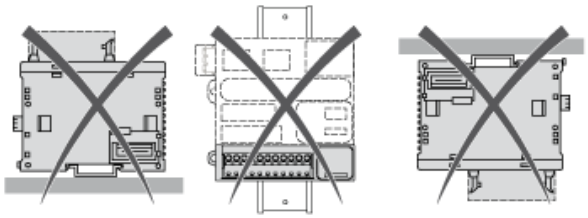

Mounting on a Panel Surface

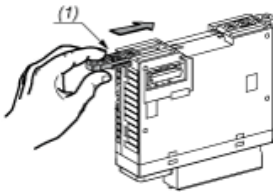

(1) Install a mounting strip

Mounting Hole Layout

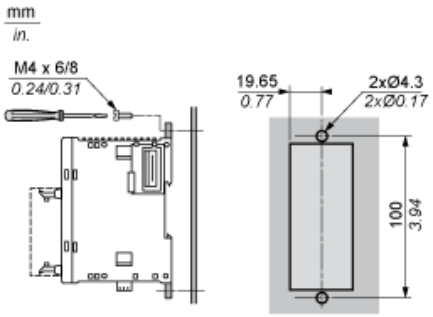

Digital Mixed I/O Module (24-channel)

Wiring Diagram (Source)

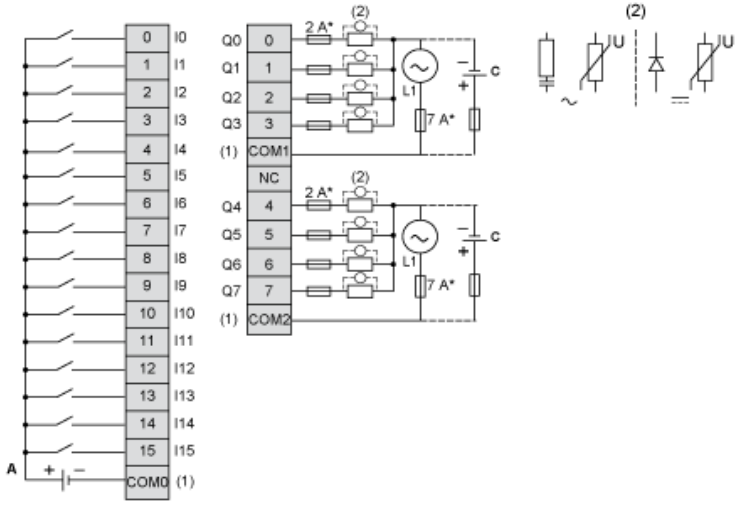

(*) Type T fuse
(1) The COM0, COM1 and COM2 terminals are not connected internally.
(2) To improve the life time of the contacts, and to protect from potential inductive load damage, it is recommended to connect a free wheeling diode in para
(A) Sink wiring (positive logic)
(C) Source wiring (positive logic)

Wiring Diagram (Sink)

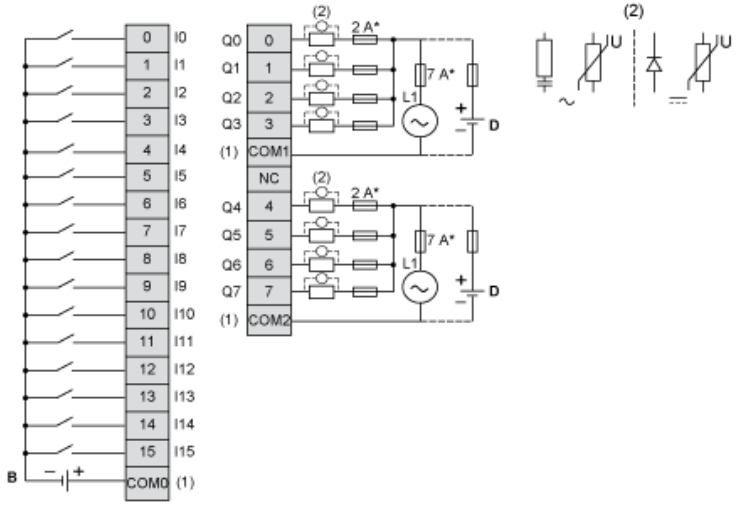

(*) Type T fuse
(1) The COM0, COM1 and COM2 terminals are not connected internally.
(2) To improve the life time of the contacts, and to protect from potential inductive load damage, it is recommended to connect a free wheeling diode in para
(B) Source wiring (negative logic)
(D) Sink wiring (negative logic)