

ONLINE DATA SHEET
www.mysick.com

Photoelectric sensors
W34, Photoelectric proximity sensor, Background suppression

WT34-R240



SICK
Sensor Intelligence.

SICK
Sensor Intelligence.

Photoelectric sensors
W34, Photoelectric proximity sensor, Background suppression

Model Name > WT34-R240
Part No. > 1019239





Illustration may differ

At a glance

- Precise background suppression at long ranges
- Immune to ambient light and crosstalk from another sensor
- Switch selectable PNP or NPN output and light/dark switching
- Versions with DC voltage (10...30V) or universal AC/DC voltage (12 … 240 V DC / 24 … 240 V AC)
- Optional test input, adjustable ON and OFF time delays, alarm output
- M12 or terminal chamber connection: 90° rotatable
- UL approval

Your benefits

- Versions with IR LED provide precise object detection at sensing ranges of 2500 mm
- Immune to ambient light and crosstalk from another sensor, providing reliable operation and less downtime
- The sensor cover protects configuration components against environmental hazards
- Adjustable time delay, alarm output, test input, and universal AC/DC voltage provide additional flexibility and reduce the number of part numbers needed

Features

Sensor/detection principle:	Photoelectric proximity sensor, Background suppression
Dimensions (W x H x D):	27 mm x 92 mm x 70 mm
Housing design (light emission):	Rectangular
Sensing range max.:	100 mm ... 1,200 mm [1]
Sensing range:	100 mm ... 1,200 mm
Type of light:	Visible red light
Light source:	LED [2]
Wave length:	660 nm
Adjustment:	Potentiometer
Light spot size (distance):	Ø 40 mm (1,200 mm)

[1] Object with 90 % reflectance (referred to standard white, DIN 5033) [2] Average service life of 100,000 h at T_A = +25 °C

Mechanics/electronics

Supply voltage::	12 V DC ... 240 V DC, 24 ... 240 V AC [1] [2]
Power consumption:	< 2 VA
Output type:	Relay, electrically isolated [3]

© SICK AG. Subject to change without notice.

Output function:	Change-over contacts
Switching mode:	Dark switching, Light switching [4]
Switching mode selector:	Selectable via light/dark selector
Switching current (switching voltage):	4 A (24 V DC), 4 A (250 V AC)
Response time:	≤ 10 ms
Switching frequency:	10 Hz [5]
Connection type:	Terminal connection with M16 gland [6]
Circuit protection::	A, C [7] [8]
Protection class:	II [9]
Weight:	140 g
Housing material:	ABS, Plastic
Enclosure rating:	IP 67
Usage category:	AC-15, DC-13, According to EN 60947-1
Ambient operating temperature:	-40 °C ... +60 °C
Ambient storage temperature:	-40 °C ... +75 °C
UL File No.:	NRKH.E181493 & NRKH7.E181493

[1] Limit values [2] ±10 % [3] [4] Provide suitable spark supression for inductive or capacitive loads [5] With light/dark ratio 1:1 [6] Connection rotable by 90° [7] A = V_S connections reverse-polarity protected [8] C = interference suppression [9] Rated voltage: 250 V AC/DC

Dimensional drawing

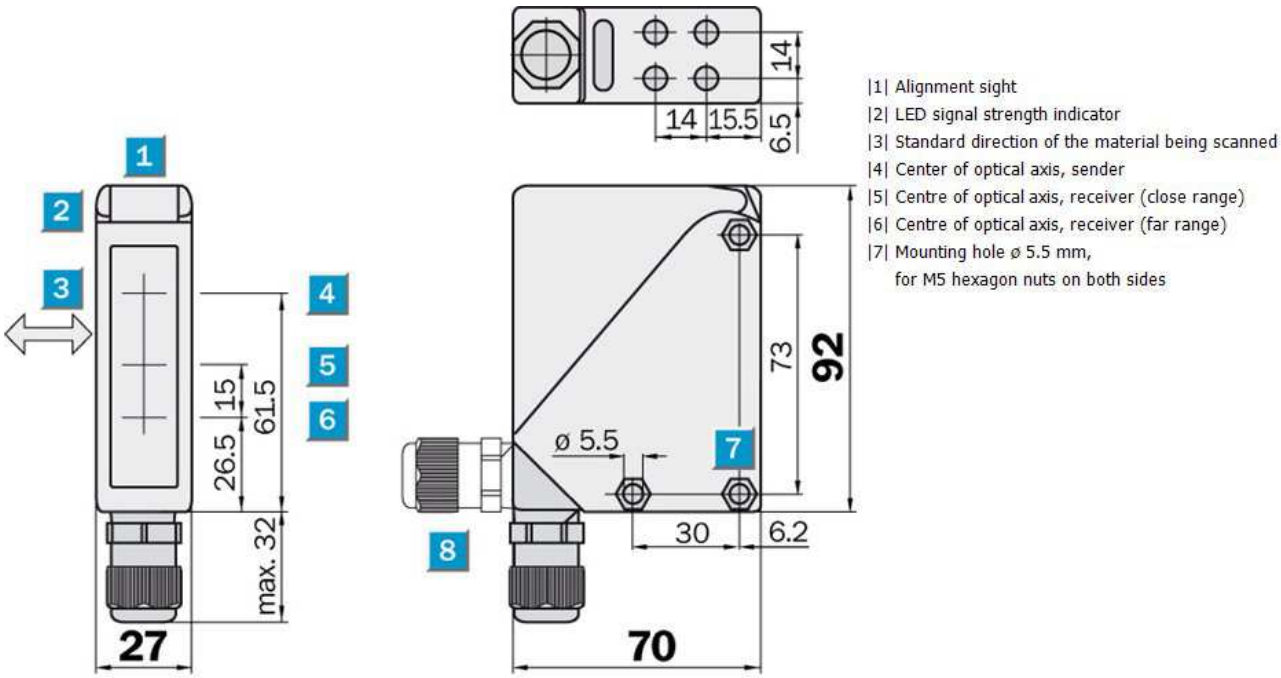

© SICK AG. Subject to change without notice.

Adjustments possible

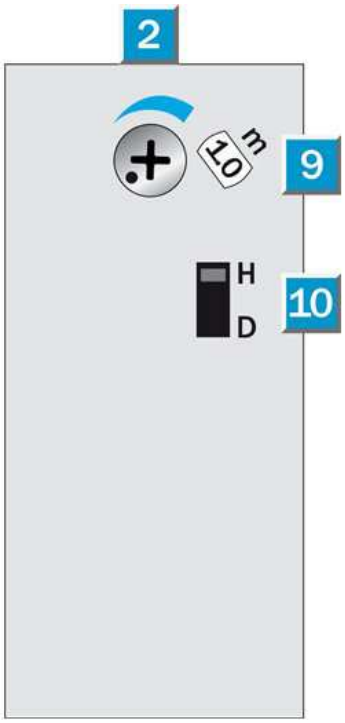

|2| LED signal strength indicator
|9| Sensing range adjustment
|10| Light/dark selector

Connection diagram

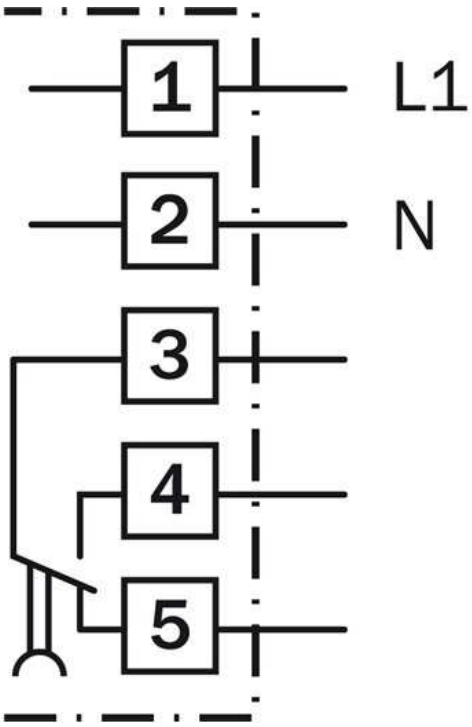

© SICK AG. Subject to change without notice.

Characteristic curve

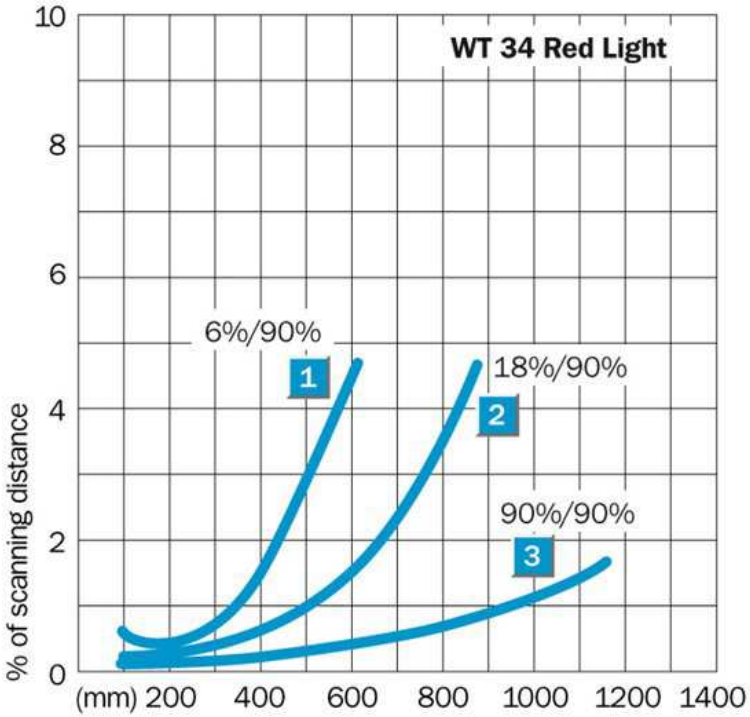

Connection type

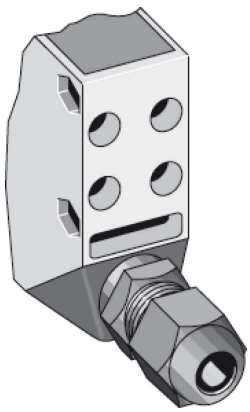

Sensing range diagram

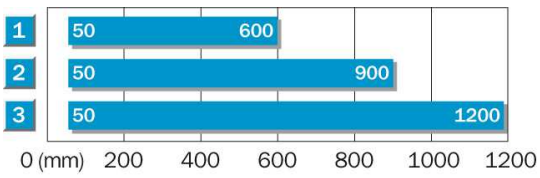

1	Scanning distance on black [9]
2	Scanning distance on grey [9]
3	Scanning distance on white [9]

© SICK AG. Subject to change without notice.

A4 4c int43

Australia
Phone +61 3 9457 0600
1800 33 48 02 – tollfree
E-Mail sales@sick.com.au

Belgium/Luxembourg
Phone +32 (0)2 466 55 66
E-Mail info@sick.be

Brasil
Phone +55 11 3215-4900
E-Mail marketing@sick.com.br

Canada
Phone +1 905 771 14 44
E-Mail information@sick.com

Česká republika
Phone +420 2 57 91 18 50
E-Mail sick@sick.cz

China
Phone +86 4000 121 000
E-Mail info.china@sick.net.cn
Phone +852-2153 6300
E-Mail ghk@sick.com.hk

Danmark
Phone +45 45 82 64 00
E-Mail sick@sick.dk

Deutschland
Phone +49 211 5301-301
E-Mail info@sick.de

España
Phone +34 93 480 31 00
E-Mail info@sick.es

France
Phone +33 1 64 62 35 00
E-Mail info@sick.fr

Great Britain
Phone +44 (0)1727 831121
E-Mail info@sick.co.uk

India
Phone +91–22–4033 8333
E-Mail info@sick-india.com

Israel
Phone +972-4-6881000
E-Mail info@sick-sensors.com

Italia
Phone +39 02 27 43 41
E-Mail info@sick.it

Japan
Phone +81 (0)3 5309 2112
E-Mail support@sick.jp

Magyarország
Phone +36 1 371 2680
E-Mail office@sick.hu

Nederland
Phone +31 (0)30 229 25 44
E-Mail info@sick.nl

Norge
Phone +47 67 81 50 00
E-Mail sick@sick.no

Österreich
Phone +43 (0)22 36 62 28 8-0
E-Mail office@sick.at

Polska
Phone +48 22 837 40 50
E-Mail info@sick.pl

România
Phone +40 356 171 120
E-Mail office@sick.ro

Russia
Phone +7-495-775-05-30
E-Mail info@sick.ru

Schweiz
Phone +41 41 619 29 39
E-Mail contact@sick.ch

Singapore
Phone +65 6744 3732
E-Mail sales.gsg@sick.com

Slovenija
Phone +386 (0)1-47 69 990
E-Mail office@sick.si

South Africa
Phone +27 11 472 3733
E-Mail info@sickautomation.co.za

South Korea
Phone +82 2 786 6321/4
E-Mail info@sickkorea.net

Suomi
Phone +358-9-25 15 800
E-Mail sick@sick.fi

Sverige
Phone +46 10 110 10 00
E-Mail info@sick.se

Taiwan
Phone +886 2 2375-6288
E-Mail sales@sick.com.tw

Türkiye
Phone +90 (216) 528 50 00
E-Mail info@sick.com.tr

United Arab Emirates
Phone +971 (0) 4 88 65 878
E-Mail info@sick.ae

USA/México
Phone +1(952) 941-6780
1 (800) 325-7425 – tollfree
E-Mail info@sickusa.com

More representatives and agencies
at **www.sick.com**

SICK
Sensor Intelligence.