

ONLINE DATA SHEET
www.mysick.com

Photoelectric sensors
W4-3, Photoelectric proximity sensor, Background suppression

WTB4-3P2161



SICK
Sensor Intelligence.

SICK
Sensor Intelligence.

Photoelectric sensors
W4-3, Photoelectric proximity sensor, Background suppression

Model Name > WTB4-3P2161
Part No. > 1028099





Illustration may differ

At a glance

- Intense light spot with PinPoint LED technology
- Sensor with IR light available upon request
- Sensing range of 4 - 150 mm
- Background suppression sensor available with laser-like light spot
- Adjustment either via teach-in pushbutton, 5-turn potentiometer, cable or IO-Link
- Second emitter LED designed for suppression of shiny backgrounds
- Flexible sensing ranges and hysteresis settings
- Key lock function, remote teach, quality monitoring

Your benefits

- Reliable detection of objects regardless of color and consistency
- Smart machine design ensures low-cost integration due to mounting flexibility in areas with limited space
- Best-in-class background suppression and a high immunity to ambient light, ensuring reliable object detection
- Rugged mounting system with M3 threaded metal inserts reduces maintenance costs due to a long service life
- Precise detection with a high level of repeat accuracy due to an intense light spot with PinPoint LED technology
- Quick and easy format adjustment
- Easy monitoring of sensor status
- Key lock function and parameter download prevent incorrect settings

Features

Sensor/detection principle:	Photoelectric proximity sensor, Background suppression
Dimensions (W x H x D):	16 mm x 39.5 mm x 12 mm
Housing design (light emission):	Rectangular
Sensing range max.:	4 mm ... 150 mm [1]
Sensing range:	15 mm ... 150 mm [2]
Type of light:	Visible red light
Light source:	PinPoint LED [3]
Wave length:	650 nm
Adjustment:	Potentiometer, 5 turns
Light spot size (distance):	Ø 7 mm (50 mm)

[1] [2] Object with 90 % reflectance (referred to standard white, DIN 5033) [3] Average service life of 100,000 h at T_A = +25 °C

© SICK AG. Subject to change without notice.

Mechanics/electronics

Supply voltage:	10 V DC ... 30 V DC [1]
Ripple::	< 5 Vpp [2] [3]
Power consumption:	≤ 20 mA [4]
Output type:	PNP
Switching mode:	Light switching
Output current Imax.:	≤ 100 mA
Response time:	< 0.5 ms [5]
Switching frequency:	1,000 Hz [6]
Connection type:	Connector M8, 3-pin
Circuit protection:::	A, C, D [7] [8] [9]
Protection class:	III
Weight:	30 g
Optics material:	PMMA
Enclosure rating:	IP 67 IP 66
Ambient operating temperature:	-40 °C ... +60 °C
Ambient storage temperature:	-40 °C ... +75 °C
UL File No.:	NRKH.E181493 & NRKH7.E181493
Housing material:	ABS, Plastic

[1] Limit values [2] [3] May not exceed or fall short of V_S tolerances [4] Without load [5] Signal transit time with resistive load [6] With light/dark ratio 1:1 [7] A = V_S connections reverse-polarity protected [8] C = interference suppression [9] D = outputs overcurrent and short-circuit protected

Dimensional drawing

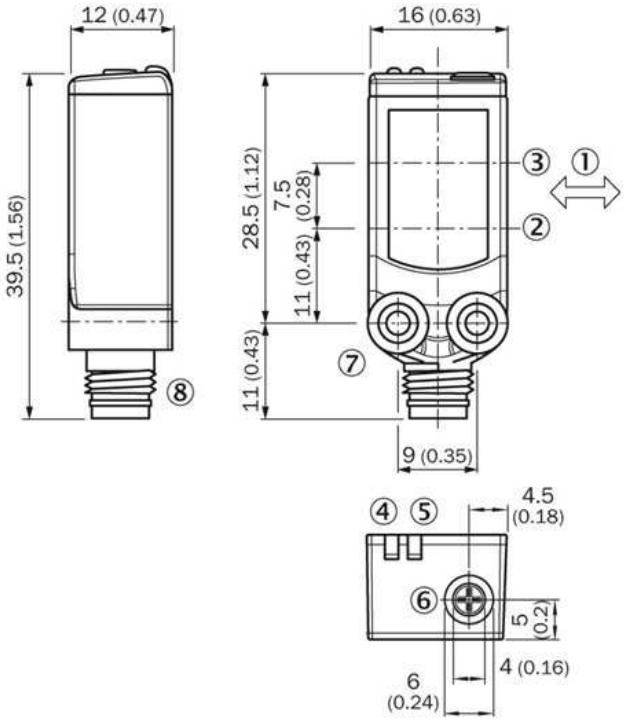

|1| Standard direction of the material being detected
|2| Optical axis, sender
|3| Optical axis, receiver
|4| Status indicator LED,
yellow: Status of received light beam
|5| Status indicator LED green: supply voltage on
|6| Potentiometer
|7| Threaded mounting hole M3
|8| Connection

© SICK AG. Subject to change without notice.

Connection diagram

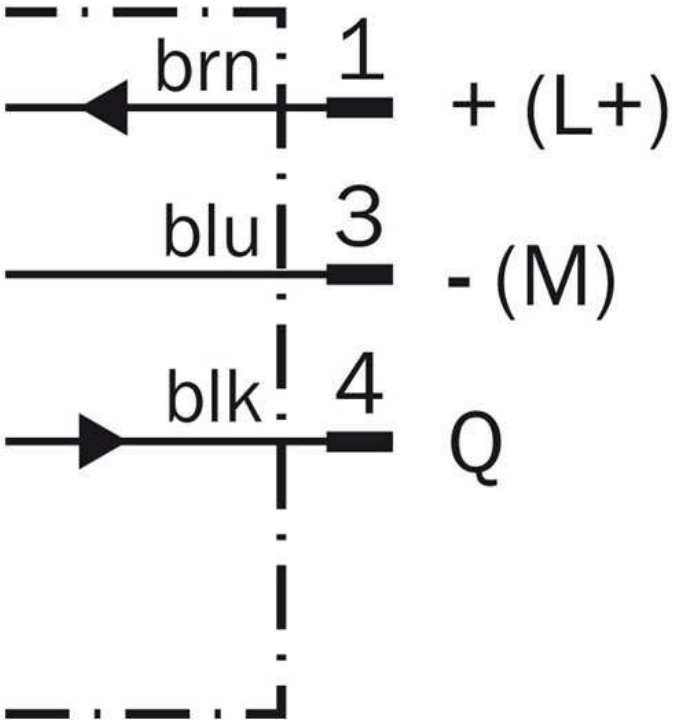

Characteristic curve

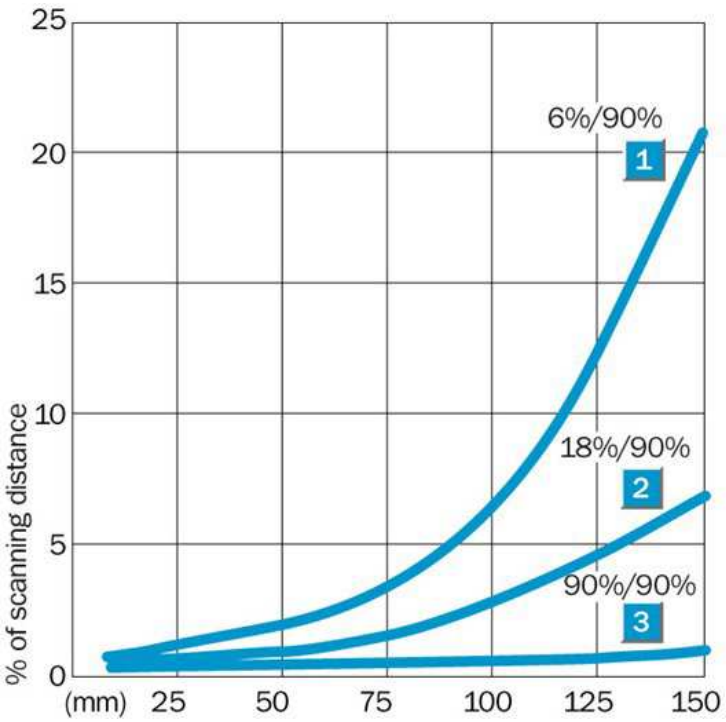

|1| Sensing range on black, 6 % remission
|2| Sensing range on gray, 18 % remission
|3| Sensing range on white, 90 % remission

© SICK AG. Subject to change without notice.

Sensing range diagram

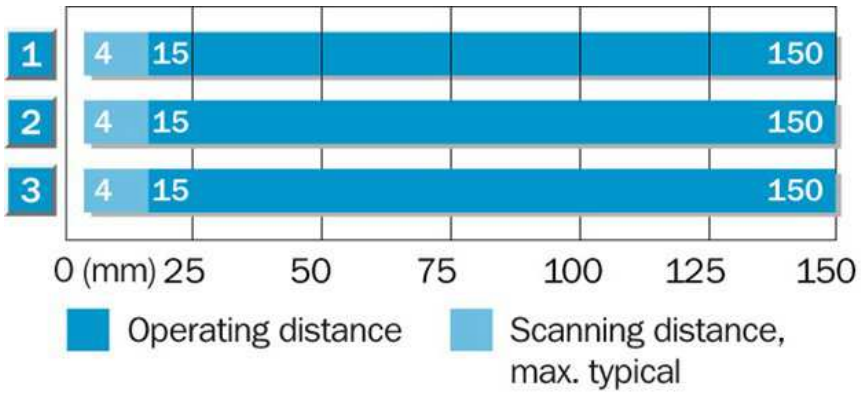

|1| Sensing range on black, 6 % remission
|2| Sensing range on gray, 18 % remission
|3| Sensing range on white, 90 % remission

1	Scanning range on black, 6 % remission
2	Scanning range on grey, 18 % remission
3	Scanning range on white, 90 % remission

Connection type

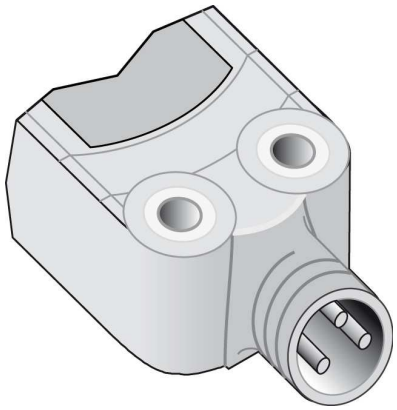

© SICK AG. Subject to change without notice.

A4 4c int43

Australia
Phone +61 3 9457 0600
1800 33 48 02 – tollfree
E-Mail sales@sick.com.au

Belgium/Luxembourg
Phone +32 (0)2 466 55 66
E-Mail info@sick.be

Brasil
Phone +55 11 3215-4900
E-Mail marketing@sick.com.br

Canada
Phone +1 905 771 14 44
E-Mail information@sick.com

Česká republika
Phone +420 2 57 91 18 50
E-Mail sick@sick.cz

China
Phone +86 4000 121 000
E-Mail info.china@sick.net.cn
Phone +852-2153 6300
E-Mail ghk@sick.com.hk

Danmark
Phone +45 45 82 64 00
E-Mail sick@sick.dk

Deutschland
Phone +49 211 5301-301
E-Mail info@sick.de

España
Phone +34 93 480 31 00
E-Mail info@sick.es

France
Phone +33 1 64 62 35 00
E-Mail info@sick.fr

Great Britain
Phone +44 (0)1727 831121
E-Mail info@sick.co.uk

India
Phone +91–22–4033 8333
E-Mail info@sick-india.com

Israel
Phone +972-4-6881000
E-Mail info@sick-sensors.com

Italia
Phone +39 02 27 43 41
E-Mail info@sick.it

Japan
Phone +81 (0)3 5309 2112
E-Mail support@sick.jp

Magyarország
Phone +36 1 371 2680
E-Mail office@sick.hu

Nederland
Phone +31 (0)30 229 25 44
E-Mail info@sick.nl

Norge
Phone +47 67 81 50 00
E-Mail sick@sick.no

Österreich
Phone +43 (0)22 36 62 28 8-0
E-Mail office@sick.at

Polska
Phone +48 22 837 40 50
E-Mail info@sick.pl

România
Phone +40 356 171 120
E-Mail office@sick.ro

Russia
Phone +7-495-775-05-30
E-Mail info@sick.ru

Schweiz
Phone +41 41 619 29 39
E-Mail contact@sick.ch

Singapore
Phone +65 6744 3732
E-Mail sales.gsg@sick.com

Slovenija
Phone +386 (0)1-47 69 990
E-Mail office@sick.si

South Africa
Phone +27 11 472 3733
E-Mail info@sickautomation.co.za

South Korea
Phone +82 2 786 6321/4
E-Mail info@sickkorea.net

Suomi
Phone +358-9-25 15 800
E-Mail sick@sick.fi

Sverige
Phone +46 10 110 10 00
E-Mail info@sick.se

Taiwan
Phone +886 2 2375-6288
E-Mail sales@sick.com.tw

Türkiye
Phone +90 (216) 528 50 00
E-Mail info@sick.com.tr

United Arab Emirates
Phone +971 (0) 4 88 65 878
E-Mail info@sick.ae

USA/México
Phone +1(952) 941-6780
1 (800) 325-7425 – tollfree
E-Mail info@sickusa.com

More representatives and agencies
at **www.sick.com**

SICK
Sensor Intelligence.