

ONLINE DATA SHEET
www.mysick.com

Photoelectric sensors
W12-3, Photoelectric proximity sensor, Background suppression

WTB12-3P2431



SICK
Sensor Intelligence.

SICK
Sensor Intelligence.

Photoelectric sensors
W12-3, Photoelectric proximity sensor, Background suppression

Model Name > WTB12-3P2431
Part No. > 1041411





Illustration may differ

At a glance

- State of the art technology provides precise background suppression
- Withstands harsh environments
- PinPoint LED technology with highly visible light spot; variants available with IR LED for highly critical applications
- Rugged die-cast zinc housing, with optional Teflon® coating
- Versatile mounting options due to dovetail mounting - mounting holes and oblong holes
- Flexible sensing ranges and hysteresis settings
- Key lock function, remote teach, quality monitoring
- Diagnostics messages (contamination and short-circuit)

Your benefits

State of the art technology, e.g. OES3 provides precise background suppression and reliable detection of challenging objects

High immunity to ambient light, optical reflections and crosstalk ensures fewer false readings and less downtime

PinPoint LED technology provides a highly visible light spot that enables quick and easy sensor alignment

Highly visible status LEDs simplify sensing distance adjustments and reduce installation time

A rugged metal housing withstands high-pressure cleaners and cleaning agents, reducing downtime

Complementary outputs in one housing reduce inventory and procurement costs

IO-Link enables quick remote diagnostics and maintenance (optional)

Easy installation using SICK accessories

Features

Sensor/detection principle:	Photoelectric proximity sensor, Background suppression
Dimensions (W x H x D):	15.6 mm x 48.5 mm x 42 mm
Housing design (light emission):	Rectangular
Sensing range max.:	20 mm ... 350 mm [1)]
Sensing range:	20 mm ... 350 mm
Type of light:	Visible red light

© SICK AG. Subject to change without notice.

Light source:	LED [2]
Wave length:	640 nm
Adjustment:	Potentiometer, 5 turns
Light spot size (distance):	Ø 6 mm (200 mm)

[1] Object with 90 % reflectance (referred to standard white DIN 5033) [2] Average service life of 100,000 h at T_A = +25 °C

Mechanics/electronics

Supply voltage:	10 V DC ... 30 V DC [1]
Ripple:	≤ 5 Vpp [2]
Power consumption:	≤ 45 mA [3]
Output type:	PNP
Output function:	Complementary
Switching mode:	Light/dark switching
Signal voltage PNP HIGH/LOW:	> Uv - 2,5 V/ca. 0 V
Output current Imax.:	100 mA
Response time:	≤ 330 µs [4]
Switching frequency:	1,500 Hz [5]
Connection type:	Connector M12, 4-pin
Circuit protection:::	A, C, D [6] [7] [8]
Protection class:	II
Weight:	120 g
Housing material:	Metal
Enclosure rating:	IP 66 IP 67 IP 69K
Ambient operating temperature:	-40 °C ... 60 °C
Ambient storage temperature:	-40 °C ... 75 °C
UL File No.:	NRKH.E181493 & NRKH7.E181493

[1] Limit values, operation in short-circuit protected network max. 8 A [2] May not exceed or fall short of V_S tolerances [3] Without load [4] Signal transit time with resistive load [5] With light/dark ratio 1:1 [6] A = V_S connections reverse-polarity protected [7] C = interference suppression [8] D = outputs overcurrent and short-circuit protected

© SICK AG. Subject to change without notice.

Dimensional drawing

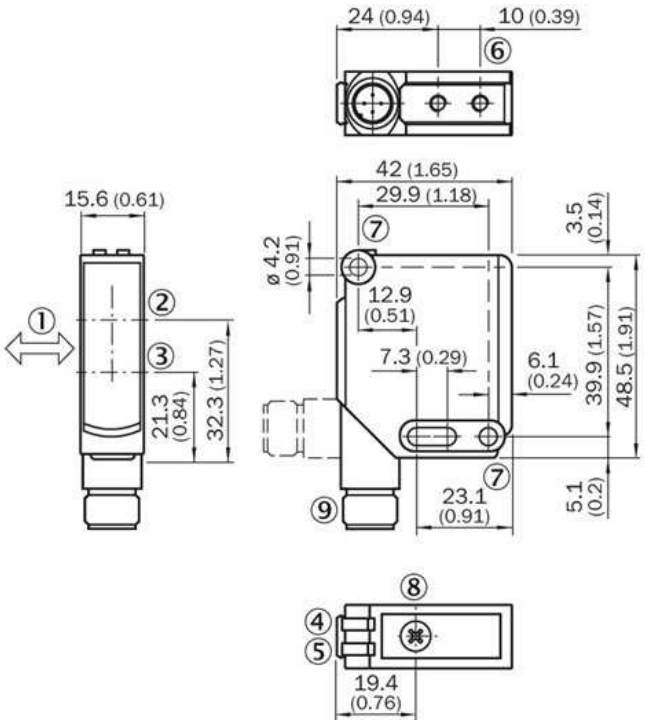

|1| Standard direction of the material being scanned
|2| Optical axis, receiver
|3| Optical axis, sender
|4| Status indicator LED green: power on
|5| Status indicator LED,
yellow: Status of received light beam
|6| M4 threaded mounting hole, 4 mm deep
|7| Mounting hole, Ø 4.2 mm
|8| Sensing range adjustment: potentiometer
|9| Connection

Adjustments possible



|4| Green LED indicator: supply voltage active
|5| LED indicator yellow: Light received
|8| Sensing range adjustment: potentiometer

© SICK AG. Subject to change without notice.

Connection diagram

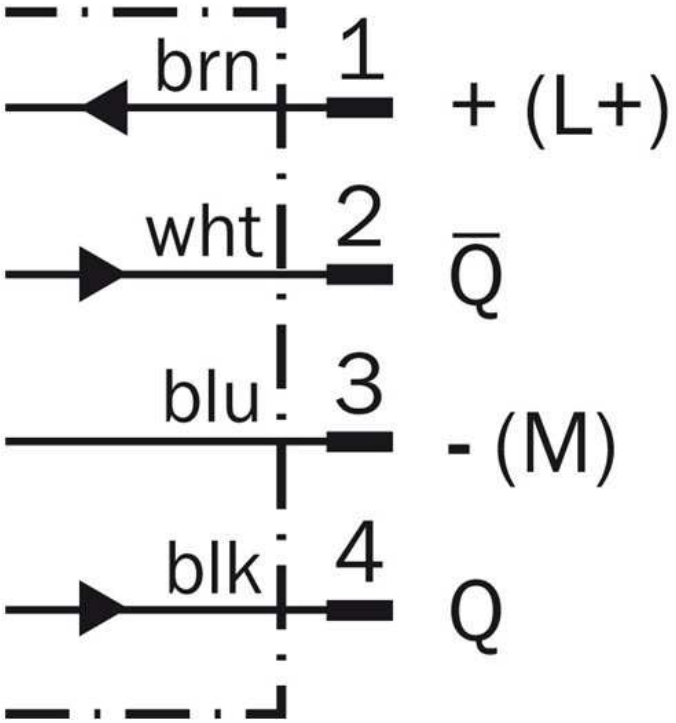

Characteristic curve

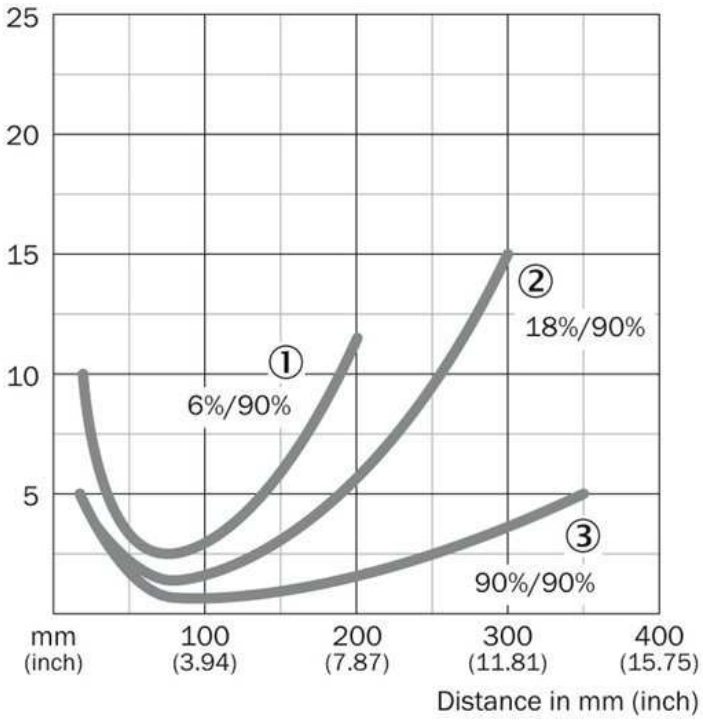

|1| Sensing range on black, 6 % remission
|2| Sensing range on grey, 18 % remission
|3| Sensing range on white, 90 % remission

© SICK AG. Subject to change without notice.

Connection type

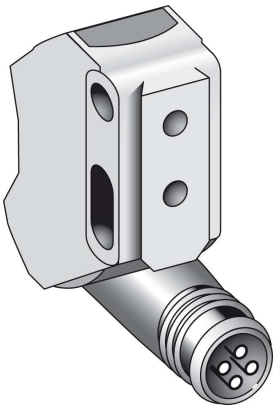

Sensing range diagram

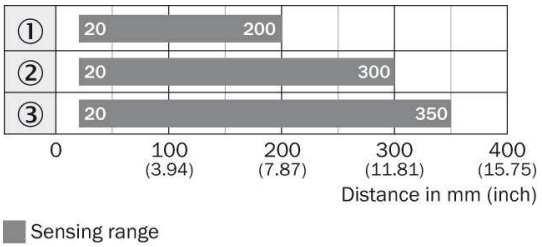

© SICK AG. Subject to change without notice.

A4 4c int43

Australia
Phone +61 3 9457 0600
1800 33 48 02 – tollfree
E-Mail sales@sick.com.au

Belgium/Luxembourg
Phone +32 (0)2 466 55 66
E-Mail info@sick.be

Brasil
Phone +55 11 3215-4900
E-Mail marketing@sick.com.br

Canada
Phone +1 905 771 14 44
E-Mail information@sick.com

Česká republika
Phone +420 2 57 91 18 50
E-Mail sick@sick.cz

China
Phone +86 4000 121 000
E-Mail info.china@sick.net.cn
Phone +852-2153 6300
E-Mail ghk@sick.com.hk

Danmark
Phone +45 45 82 64 00
E-Mail sick@sick.dk

Deutschland
Phone +49 211 5301-301
E-Mail info@sick.de

España
Phone +34 93 480 31 00
E-Mail info@sick.es

France
Phone +33 1 64 62 35 00
E-Mail info@sick.fr

Great Britain
Phone +44 (0)1727 831121
E-Mail info@sick.co.uk

India
Phone +91–22–4033 8333
E-Mail info@sick-india.com

Israel
Phone +972-4-6881000
E-Mail info@sick-sensors.com

Italia
Phone +39 02 27 43 41
E-Mail info@sick.it

Japan
Phone +81 (0)3 5309 2112
E-Mail support@sick.jp

Magyarország
Phone +36 1 371 2680
E-Mail office@sick.hu

Nederland
Phone +31 (0)30 229 25 44
E-Mail info@sick.nl

Norge
Phone +47 67 81 50 00
E-Mail sick@sick.no

Österreich
Phone +43 (0)22 36 62 28 8-0
E-Mail office@sick.at

Polska
Phone +48 22 837 40 50
E-Mail info@sick.pl

România
Phone +40 356 171 120
E-Mail office@sick.ro

Russia
Phone +7-495-775-05-30
E-Mail info@sick.ru

Schweiz
Phone +41 41 619 29 39
E-Mail contact@sick.ch

Singapore
Phone +65 6744 3732
E-Mail sales.gsg@sick.com

Slovenija
Phone +386 (0)1-47 69 990
E-Mail office@sick.si

South Africa
Phone +27 11 472 3733
E-Mail info@sickautomation.co.za

South Korea
Phone +82 2 786 6321/4
E-Mail info@sickkorea.net

Suomi
Phone +358-9-25 15 800
E-Mail sick@sick.fi

Sverige
Phone +46 10 110 10 00
E-Mail info@sick.se

Taiwan
Phone +886 2 2375-6288
E-Mail sales@sick.com.tw

Türkiye
Phone +90 (216) 528 50 00
E-Mail info@sick.com.tr

United Arab Emirates
Phone +971 (0) 4 88 65 878
E-Mail info@sick.ae

USA/México
Phone +1(952) 941-6780
1 (800) 325-7425 – tollfree
E-Mail info@sickusa.com

More representatives and agencies
at **www.sick.com**

SICK
Sensor Intelligence.