

ONLINE DATA SHEET
www.mysick.com

Magnetic Cylinder Sensors
Sensors for T-slot cylinders

MZT8-03VPS-KRD



SICK
Sensor Intelligence.

SICK
Sensor Intelligence.

Magnetic Cylinder Sensors
Sensors for T-slot cylinders

Model Name > MZT8-03VPS-KRD
Part No. > 1044464



At a glance

- Fits into all commonly used cylinders, linear slides and grippers with T-slots and it can be also applied to multiple cylinders types such as round, tie-rod, integrated profile or dove-tail cylinders with mounting brackets
- Complete range with PNP/ NPN, PUR and PVC cable , M8 and M12 connector
- Combined Allen and flathead installation screw
- Very short sensor housing to install on short stroke cylinders
- LED function indicator
- IP 67 / IP 68 / IP 69K enclosure rating (depending on type)

Your benefits

- Best-in-class switching performance for precise piston position
- Reduced maintenance cost as the sensor keeps its position under shock and vibration and does not move out
- Increased machine throughput thanks to SICK' s proprietary GMR technology (giant magneto resistive) as well as the SICK-ASIC (application specific integrated circuit) that ensure precise one-time switching while eliminating false signals
- Flexible installation via Allen wrench or flathead screwdriver
- Time saving single-hand mounting with ¼-turn installation.
- Convenient installation and sensor replacement due to drop-in installation - installer does not need to disassemble the cylinder from the machine for sensor replacement.
- Extremely rugged housing - rated for IP67 respectively IP 68 and IP 69K, enlarging sensor life time

Features

Switching frequency typ.:	± 1,000 Hz
Output type:	PNP
Output function:	NO
Electrical wiring:	DC 3-wire
Cylinder type:	T-slot
Cylinder types with adapter:	Profile cylinder Roundbody cylinder SMC rail cylinder CDQ2 SMC rail cylinder ECDQ2 Tie rod cylinder Cylinders with dovetail slots
Housing length:	24 mm
Enclosure rating:	IP 68 [1)]

© SICK AG. Subject to change without notice.

[1] According to EN 60529 (IP67/IP68)

Mechanics/electronics

Connection type:	Cable with connector M8, 3-pin, with knurled nuts, 0.3 m
Thread size:	M8
Supply voltage:	10 V DC ... 30 V DC
Power consumption:	≤ 10 mA [1]
Voltage drop:	≤ 2.2 V
Output current Ia:	≤ 200 mA
EMC:	According to EN 60947-5-2
Cable material:	PUR
Conductor cross-section:	14 mm²
Reverse polarity protection:	✓
Short-circuit protection:	✓
Housing material:	Plastic
Housing cap material:	PA12
Power-up pulse protection:	✓
Repeatability:	≤ 0.1 mT [2]
Overrun distance typ.:	3 mm
Shock and vibration resistance:	30 g, 11 ms／10 ... 55 Hz, 1 mm
Ambient operating temperature:	-30 °C ... +80 °C
Protection class:	III
Hysteresis typ.:	> 0.5 mT
Magnetic field sensitivity, typ.:	2.6 mT

[1] Without load [2] Ub and Ta constant

© SICK AG. Subject to change without notice.

Dimensional drawing

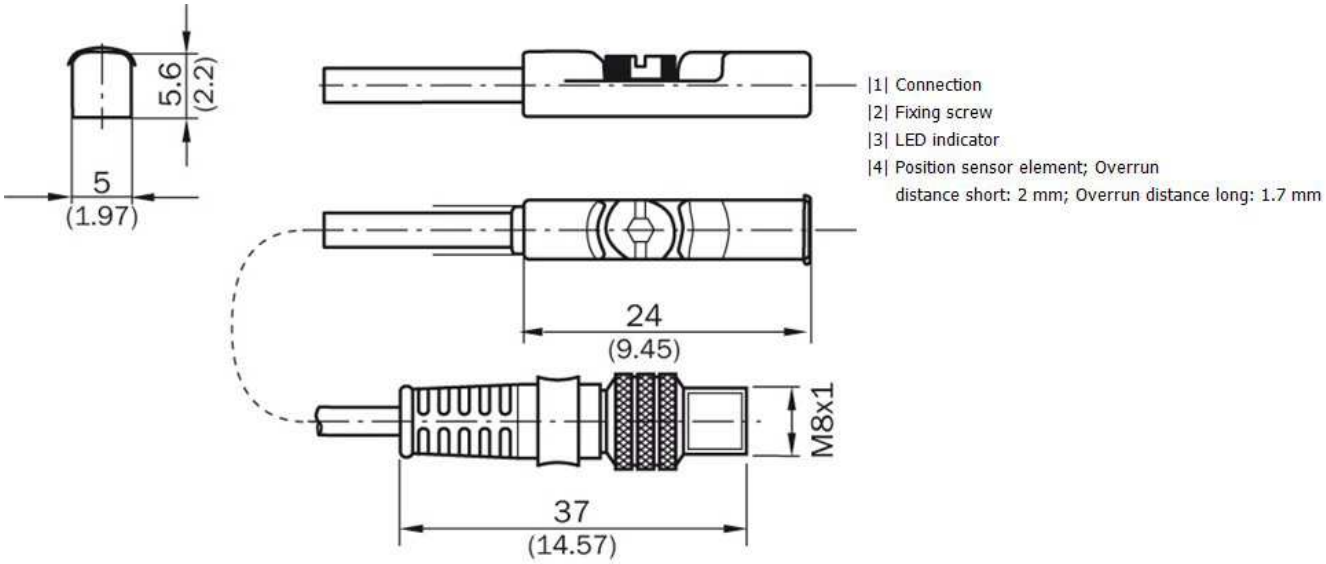

Connection diagram

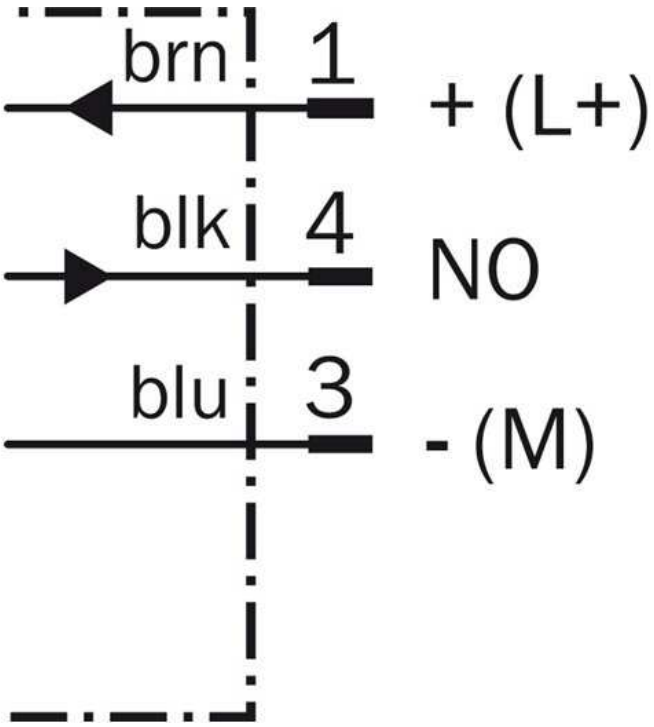

© SICK AG. Subject to change without notice.

Connection type



© SICK AG. Subject to change without notice.

A4 4c int43

Australia
Phone +61 3 9457 0600
1800 33 48 02 – tollfree
E-Mail sales@sick.com.au

Belgium/Luxembourg
Phone +32 (0)2 466 55 66
E-Mail info@sick.be

Brasil
Phone +55 11 3215-4900
E-Mail marketing@sick.com.br

Canada
Phone +1 905 771 14 44
E-Mail information@sick.com

Česká republika
Phone +420 2 57 91 18 50
E-Mail sick@sick.cz

China
Phone +86 4000 121 000
E-Mail info.china@sick.net.cn
Phone +852-2153 6300
E-Mail ghk@sick.com.hk

Danmark
Phone +45 45 82 64 00
E-Mail sick@sick.dk

Deutschland
Phone +49 211 5301-301
E-Mail info@sick.de

España
Phone +34 93 480 31 00
E-Mail info@sick.es

France
Phone +33 1 64 62 35 00
E-Mail info@sick.fr

Great Britain
Phone +44 (0)1727 831121
E-Mail info@sick.co.uk

India
Phone +91–22–4033 8333
E-Mail info@sick-india.com

Israel
Phone +972-4-6881000
E-Mail info@sick-sensors.com

Italia
Phone +39 02 27 43 41
E-Mail info@sick.it

Japan
Phone +81 (0)3 5309 2112
E-Mail support@sick.jp

Magyarország
Phone +36 1 371 2680
E-Mail office@sick.hu

Nederland
Phone +31 (0)30 229 25 44
E-Mail info@sick.nl

Norge
Phone +47 67 81 50 00
E-Mail sick@sick.no

Österreich
Phone +43 (0)22 36 62 28 8-0
E-Mail office@sick.at

Polska
Phone +48 22 837 40 50
E-Mail info@sick.pl

România
Phone +40 356 171 120
E-Mail office@sick.ro

Russia
Phone +7-495-775-05-30
E-Mail info@sick.ru

Schweiz
Phone +41 41 619 29 39
E-Mail contact@sick.ch

Singapore
Phone +65 6744 3732
E-Mail sales.gsg@sick.com

Slovenija
Phone +386 (0)1-47 69 990
E-Mail office@sick.si

South Africa
Phone +27 11 472 3733
E-Mail info@sickautomation.co.za

South Korea
Phone +82 2 786 6321/4
E-Mail info@sickkorea.net

Suomi
Phone +358-9-25 15 800
E-Mail sick@sick.fi

Sverige
Phone +46 10 110 10 00
E-Mail info@sick.se

Taiwan
Phone +886 2 2375-6288
E-Mail sales@sick.com.tw

Türkiye
Phone +90 (216) 528 50 00
E-Mail info@sick.com.tr

United Arab Emirates
Phone +971 (0) 4 88 65 878
E-Mail info@sick.ae

USA/México
Phone +1(952) 941-6780
1 (800) 325-7425 – tollfree
E-Mail info@sickusa.com

More representatives and agencies
at **www.sick.com**

SICK
Sensor Intelligence.