

ONLINE DATA SHEET
www.mysick.com

Photoelectric sensors
W260, Through-beam photoelectric sensor

WS/WE260-R270



SICK
Sensor Intelligence.

SICK
Sensor Intelligence.

Photoelectric sensors
W260, Through-beam photoelectric sensor

Model Name > WS/WE260-R270
Part No. > 6020774



Illustration may differ

At a glance

- Long sensing ranges
- Mounting brackets for sender and receiver are included with delivery
- Selectable operation mode (light/dark)
- Optional time stages
- M12 connector or terminal chamber
- Versions for 10 - 30 V DC or 12 - 240 V DC/ 24 – 240 V AC voltage supply

Your benefits

- High operating reserve provides increased reliability
- Configuration controls are protected by a cover, ensuring less damage and a longer service life
- Easily accessible terminal chamber for electrical connections simplifies installation
- Simplified integration due to mounting compatibility since variants for DC or DC/AC voltage supply are available in the same design

CE

Features

Sensor/detection principle:	Through-beam photoelectric sensor
Dimensions (W x H x D):	25 mm x 78 mm x 63 mm
Housing design (light emission):	Rectangular
Sensing range max.:	0 m ... 45 m
Sensing range:	0 m ... 40 m
Type of light:	Visible red light
Light source:	LED [1)]
Time type:	Off delay, On delay
Delay time:	Adjustable via time control, Adjustable via time delay selector switch, 0.1 s, 10 s
Angle of dispersion:	Ca. 1 °
Adjustment:	Potentiometer, 270 °
Light spot size (distance):	Ø 700 mm (40 m)

[1)] Average service life of 100,000 h at T_A = +25 °C

Mechanics/electronics

Supply voltage::	12 V DC ... 240 V DC, 24 V AC ... 240 V AC [1) 2)]
Power consumption, sender:	≤ 4 VA
Power consumption, receiver:	≤ 5 VA

© SICK AG. Subject to change without notice.

Output type:	Relay, electrically isolated [3]
Output function:	Change-over contacts
Switching mode:	Light switching [4]
Switching current (switching voltage):	3 A (240 V AC), 3 A (30 V DC)
Response time:	≤ 20 ms
Switching frequency:	25 Hz [5]
Angle of reception:	Ca. 20 °
Electrical connection:	Cable gland
Circuit protection::	A, C [6] [7]
Protection class:	II [8]
Weight:	120 g
Interference emission:	Level EN 61000-6-3 Residential and commercial areas
Optics material:	PC
Enclosure rating:	IP 67
Items supplied:	Mounting bracket BEF-W260
Usage category:	AC-15, DC-13, According to EN 60947-1
Ambient temperature operation:	-25 °C ... +55 °C
Ambient storage temperature:	-40 °C ... +70 °C
UL File No.:	EN50081-1, 242356
Housing material:	ABS, Plastic

[1] [2] ±10 % [3] [4] Provide suitable spark suppression for inductive or capacitive loads [5] With light/dark ratio 1:1 [6] A = V_S connections reverse-polarity protected [7] C = interference suppression [8] Rated voltage: 250 V AC/DC

Dimensional drawing

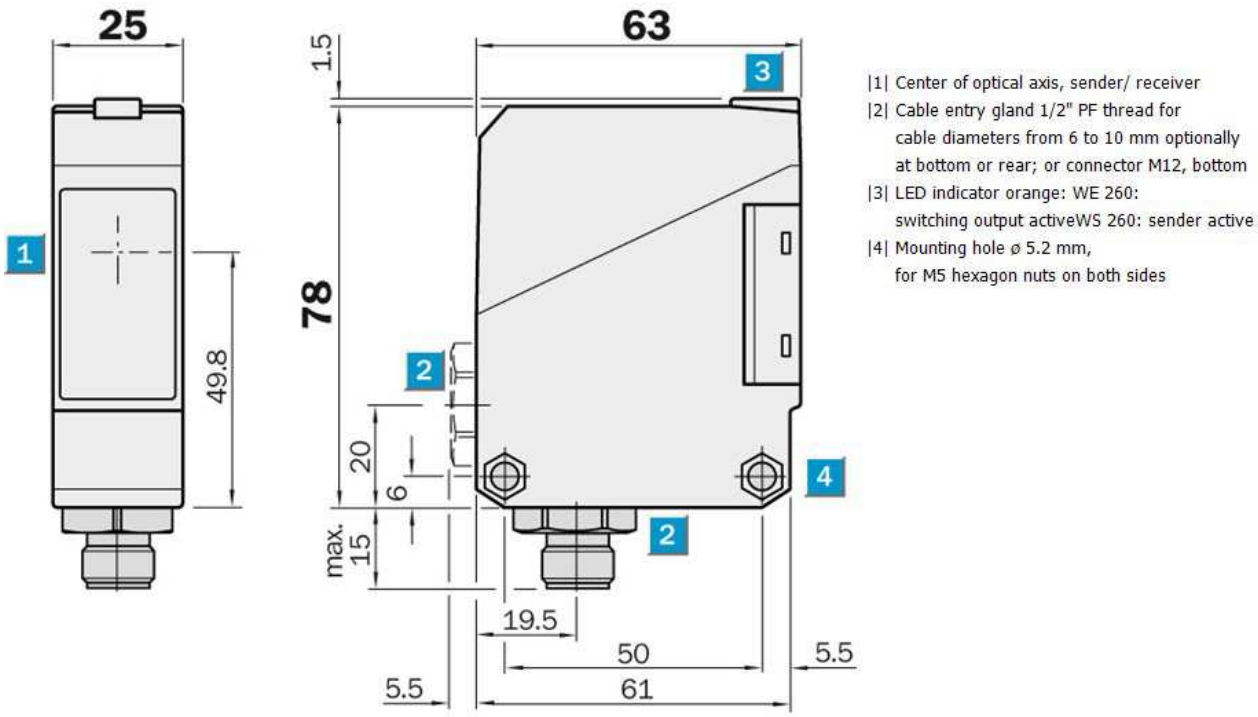

|1| Center of optical axis, sender/ receiver
|2| Cable entry gland 1/2" PF thread for cable diameters from 6 to 10 mm optionally at bottom or rear; or connector M12, bottom
|3| LED indicator orange: WE 260: switching output activeWS 260: sender active
|4| Mounting hole ø 5.2 mm, for M5 hexagon nuts on both sides

© SICK AG. Subject to change without notice.

Adjustments possible

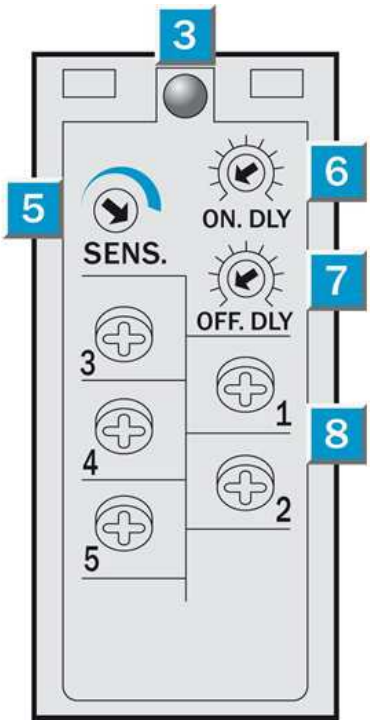

|3| LED indicator orange: WE 260:
switching output activeWS 260: sender active
|5| Sensitivity adjustment
|6| Time control ON delay tON
|7| Time control OFF delay tOFF
|8| Terminals

Connection diagram

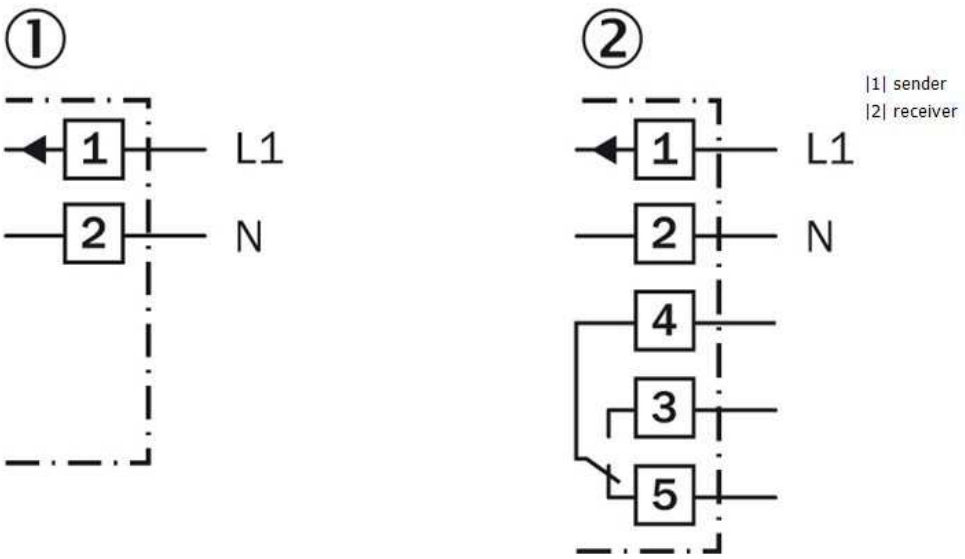

|1| sender
|2| receiver

© SICK AG. Subject to change without notice.

Characteristic curve

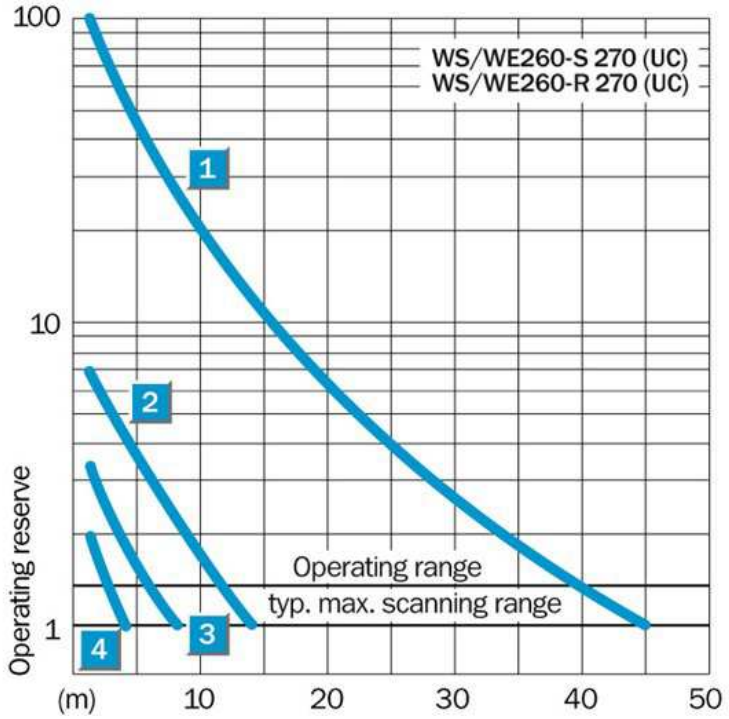

Sensing range diagram

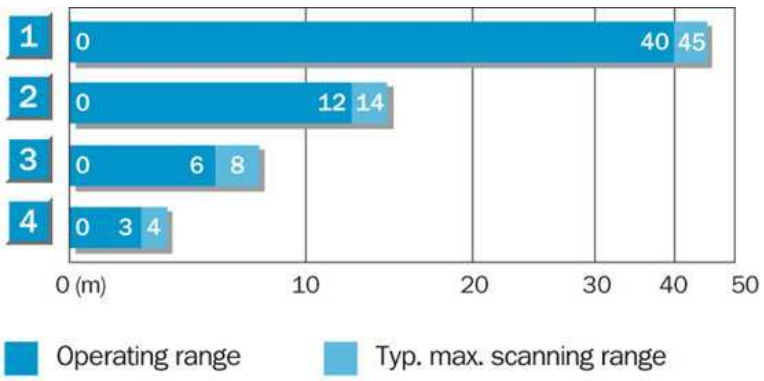

	Scanning range reduction when using slotted masks
1	Without slotted mask
2	Slot width 5 mm
3	Slot width 2 mm
4	Slot width 1 mm

© SICK AG. Subject to change without notice.

Connection type

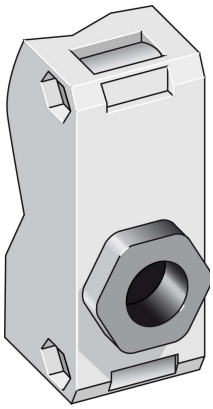

© SICK AG. Subject to change without notice.

A4 4c int43

Australia
Phone +61 3 9457 0600
1800 33 48 02 – tollfree
E-Mail sales@sick.com.au

Belgium/Luxembourg
Phone +32 (0)2 466 55 66
E-Mail info@sick.be

Brasil
Phone +55 11 3215-4900
E-Mail marketing@sick.com.br

Canada
Phone +1 905 771 14 44
E-Mail information@sick.com

Česká republika
Phone +420 2 57 91 18 50
E-Mail sick@sick.cz

China
Phone +86 4000 121 000
E-Mail info.china@sick.net.cn
Phone +852-2153 6300
E-Mail ghk@sick.com.hk

Danmark
Phone +45 45 82 64 00
E-Mail sick@sick.dk

Deutschland
Phone +49 211 5301-301
E-Mail info@sick.de

España
Phone +34 93 480 31 00
E-Mail info@sick.es

France
Phone +33 1 64 62 35 00
E-Mail info@sick.fr

Great Britain
Phone +44 (0)1727 831121
E-Mail info@sick.co.uk

India
Phone +91–22–4033 8333
E-Mail info@sick-india.com

Israel
Phone +972-4-6881000
E-Mail info@sick-sensors.com

Italia
Phone +39 02 27 43 41
E-Mail info@sick.it

Japan
Phone +81 (0)3 5309 2112
E-Mail support@sick.jp

Magyarország
Phone +36 1 371 2680
E-Mail office@sick.hu

Nederland
Phone +31 (0)30 229 25 44
E-Mail info@sick.nl

Norge
Phone +47 67 81 50 00
E-Mail sick@sick.no

Österreich
Phone +43 (0)22 36 62 28 8-0
E-Mail office@sick.at

Polska
Phone +48 22 837 40 50
E-Mail info@sick.pl

România
Phone +40 356 171 120
E-Mail office@sick.ro

Russia
Phone +7-495-775-05-30
E-Mail info@sick.ru

Schweiz
Phone +41 41 619 29 39
E-Mail contact@sick.ch

Singapore
Phone +65 6744 3732
E-Mail sales.gsg@sick.com

Slovenija
Phone +386 (0)1-47 69 990
E-Mail office@sick.si

South Africa
Phone +27 11 472 3733
E-Mail info@sickautomation.co.za

South Korea
Phone +82 2 786 6321/4
E-Mail info@sickkorea.net

Suomi
Phone +358-9-25 15 800
E-Mail sick@sick.fi

Sverige
Phone +46 10 110 10 00
E-Mail info@sick.se

Taiwan
Phone +886 2 2375-6288
E-Mail sales@sick.com.tw

Türkiye
Phone +90 (216) 528 50 00
E-Mail info@sick.com.tr

United Arab Emirates
Phone +971 (0) 4 88 65 878
E-Mail info@sick.ae

USA/México
Phone +1(952) 941-6780
1 (800) 325-7425 – tollfree
E-Mail info@sickusa.com

More representatives and agencies
at **www.sick.com**

SICK
Sensor Intelligence.