

ONLINE DATA SHEET
www.mysick.com

Inductive proximity sensors
Cylindrical threaded housing, IMF12

IMF12-04BPSVC0S



SICK
Sensor Intelligence.

SICK
Sensor Intelligence.

Inductive proximity sensors
Cylindrical threaded housing, IMF12

Model Name > IMF12-04BPSVC0S
Part No. > 6035460





At a glance

- Size M12
- Extremely watertight (IP 68/IP 69K)
- Extended temperature range (-40 to +80 °C). Tolerates short-term temperature increases up to 100 °C
- Stainless steel housing (316L/1.4404)
- Front cap made of PPS (FDA-certified material)
- Resistant to industrial cleaning agents, ECOLAB and JohnsonDiversey certified

Your benefits

- Reduced machine downtime
- Hygienic process due to FDA approved material and hygienic design
- Reduced maintenance costs due to sensor's resistance to aggressive cleaning cycles
- No restrictions on cleaning agents or processes, ensuring reliable operation

Features

Design:	Cylindrical
Thread size:	M12 x 1
Sensing range Sn:	4 mm
Assured sensing range Sa:	3.24 mm
Installation type:	Flush
Switching frequency:	2,000 Hz
Output type:	PNP
Output function:	NO
Electrical wiring:	DC 3-wire
Enclosure rating::	IP 68, IP 69K [1) 2)]
Electrical connection:	Connector M12, 4-pin [3)]

[1)] According to EN 60529 [2)] According to EN40050 [3)] With gold plated contact pins

Mechanics/electronics

Supply voltage:	10 V ... 30 V
Residual ripple:	≤ 10 %
Voltage drop:	≤ 2 V
Power consumption:	≤ 15 mA [1)]
Time delay before availability:	Ca. 50 ms

© SICK AG. Subject to change without notice.

Hysteresis:	1 % ... 20 %
Repeatability::	5 % [2) 3)]
Temperature drift (of Sr):	± 10 %
EMC:	According to EN 60947-5-2
Output current Ia:	≤ 200 mA
Short-circuit protection:	✓
Reverse polarity protection:	✓
Power-up pulse protection:	✓
Shock and vibration resistance:	30 g, 11 ms/10 Hz ... 55 Hz, 1 mm
Ambient temperature operation:	-40 °C ... 80 °C [4)]
Housing material:	Stainless steel, Stainless steel V4A (1.4404, 316L)
Housing cap material:	PPS
Housing length:	65 mm
Thread length:	39 mm
Tightening torque, max.:	20 Nm

[1)] Without load [2)] Ub and Ta constant [3)] Of Sr [4)] +100 °C for 15 minutes

Reduction factors

Note:	The values are reference values which may vary
Stainless steel (V2A, 304):	Ca. 0.75
Copper (Cu):	Ca. 0.3
Aluminum (Al):	Ca. 0.35
Brass (Br):	Ca. 0.4

Installation note

A:	6 mm
B:	12 mm
C:	12 mm
D:	12 mm
E:	Aluminium: 2 .4 mm, Stainless steal: 0 mm, Brass: 2.4 mm, Steel: 0 mm
F:	32 mm
Remark:	Associated graphic see "Installation"

© SICK AG. Subject to change without notice.

Installation note

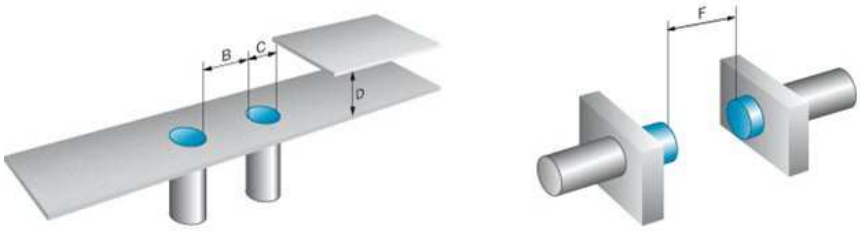

Dimensional drawing

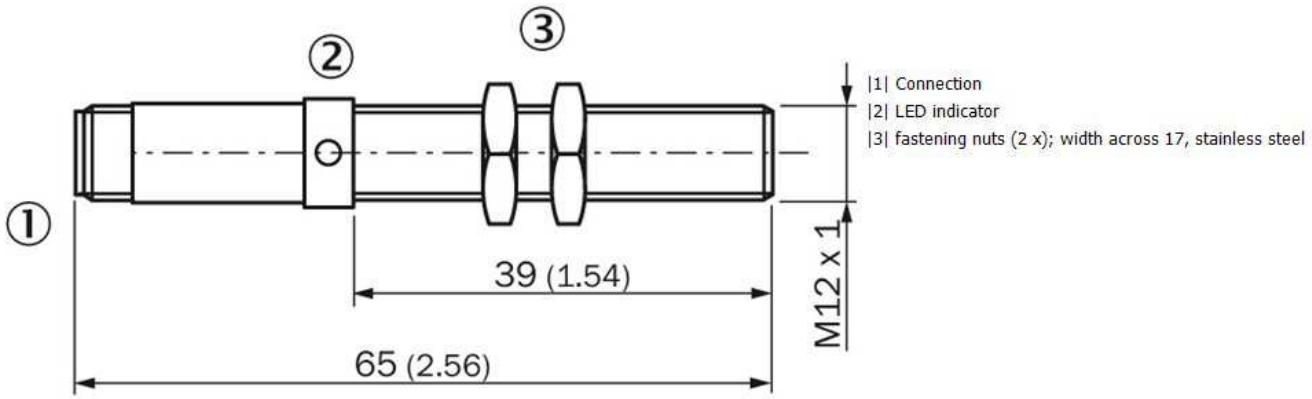

All dimensions in mm (inch)

© SICK AG. Subject to change without notice.

Connection diagram

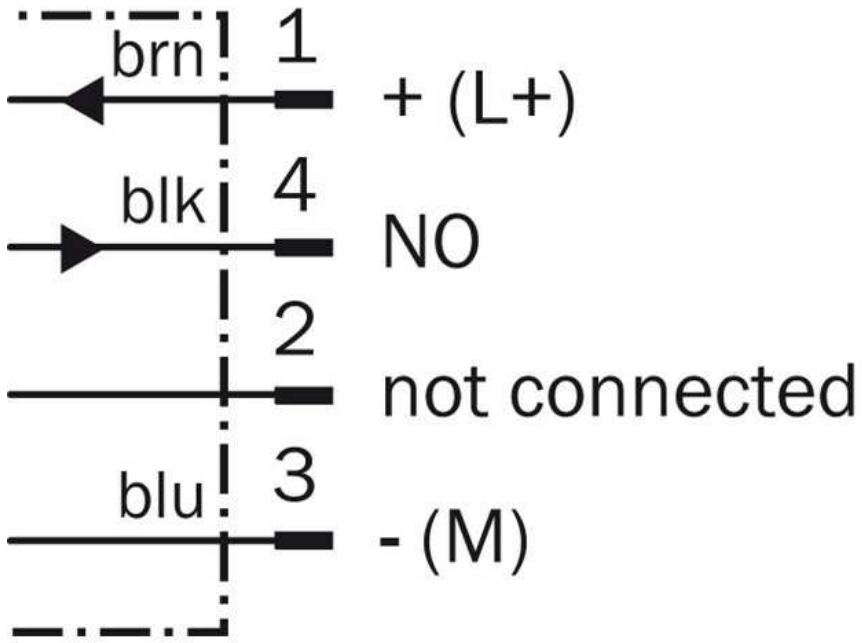

Connection type

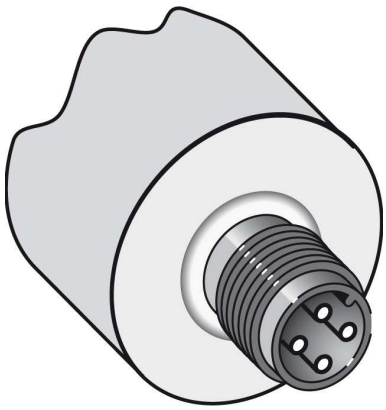

© SICK AG. Subject to change without notice.

A4 4c int43

Australia
Phone +61 3 9457 0600
1800 33 48 02 – tollfree
E-Mail sales@sick.com.au

Belgium/Luxembourg
Phone +32 (0)2 466 55 66
E-Mail info@sick.be

Brasil
Phone +55 11 3215-4900
E-Mail marketing@sick.com.br

Canada
Phone +1 905 771 14 44
E-Mail information@sick.com

Česká republika
Phone +420 2 57 91 18 50
E-Mail sick@sick.cz

China
Phone +86 4000 121 000
E-Mail info.china@sick.net.cn
Phone +852-2153 6300
E-Mail ghk@sick.com.hk

Danmark
Phone +45 45 82 64 00
E-Mail sick@sick.dk

Deutschland
Phone +49 211 5301-301
E-Mail info@sick.de

España
Phone +34 93 480 31 00
E-Mail info@sick.es

France
Phone +33 1 64 62 35 00
E-Mail info@sick.fr

Great Britain
Phone +44 (0)1727 831121
E-Mail info@sick.co.uk

India
Phone +91–22–4033 8333
E-Mail info@sick-india.com

Israel
Phone +972-4-6881000
E-Mail info@sick-sensors.com

Italia
Phone +39 02 27 43 41
E-Mail info@sick.it

Japan
Phone +81 (0)3 5309 2112
E-Mail support@sick.jp

Magyarország
Phone +36 1 371 2680
E-Mail office@sick.hu

Nederland
Phone +31 (0)30 229 25 44
E-Mail info@sick.nl

Norge
Phone +47 67 81 50 00
E-Mail sick@sick.no

Österreich
Phone +43 (0)22 36 62 28 8-0
E-Mail office@sick.at

Polska
Phone +48 22 837 40 50
E-Mail info@sick.pl

România
Phone +40 356 171 120
E-Mail office@sick.ro

Russia
Phone +7-495-775-05-30
E-Mail info@sick.ru

Schweiz
Phone +41 41 619 29 39
E-Mail contact@sick.ch

Singapore
Phone +65 6744 3732
E-Mail sales.gsg@sick.com

Slovenija
Phone +386 (0)1-47 69 990
E-Mail office@sick.si

South Africa
Phone +27 11 472 3733
E-Mail info@sickautomation.co.za

South Korea
Phone +82 2 786 6321/4
E-Mail info@sickkorea.net

Suomi
Phone +358-9-25 15 800
E-Mail sick@sick.fi

Sverige
Phone +46 10 110 10 00
E-Mail info@sick.se

Taiwan
Phone +886 2 2375-6288
E-Mail sales@sick.com.tw

Türkiye
Phone +90 (216) 528 50 00
E-Mail info@sick.com.tr

United Arab Emirates
Phone +971 (0) 4 88 65 878
E-Mail info@sick.ae

USA/México
Phone +1(952) 941-6780
1 (800) 325-7425 – tollfree
E-Mail info@sickusa.com

More representatives and agencies
at **www.sick.com**

SICK
Sensor Intelligence.