

ONLINE DATA SHEET
www.mysick.com

Photoelectric sensors
V18V, Photoelectric retro-reflective sensor, Standard optics

VL18-4P3140V



SICK
Sensor Intelligence.

SICK
Sensor Intelligence.

Photoelectric sensors
V18V, Photoelectric retro-reflective sensor, Standard optics

Model Name > VL18-4P3140V
Part No. > 6035495





Illustration may differ

At a glance

- IP 69K-rated cylindrical retro-reflective photoelectric sensor in M18 stainless steel housing with 5 m sensing distance
- Available for clear material detection up to 4.5 m
- Extended temperature range: +85° C (long-term), +100°C / 15 min. (short-term)
- Touch teach-in adjustment
- All sensor materials, including the housing, LED and lens are resistant to chemicals
- IP 69K and IP 68 according to DIN 40050
- Laser-etched part numbers
- Ecolab & JohnsonDiversey certified for chemical resistance
- Resistant to all common cleaning agents and certified by independent institutes

Your benefits

- Simple, time-saving design ensures easy mounting, alignment and replacement
- IP 69K-rated stainless steel housing has a long service life that withstands hygienic and wash down environments, reducing maintenance time and costs
- Unique touch-teach feature and lock/ unlock functionality allow users to control who can change the sensor setting, which reduces the chances of disturbing a proven process and saves commissioning and maintenance time
- Laser-etched part numbers ensure the part numbers will not be washed off, saving maintenance time
- Polarizing filter prevents false readings on reflective objects, reducing downtime

Features

Sensor/detection principle:	Photoelectric retro-reflective sensor, Standard optics
Housing design (light emission):	Cylindrical, straight, straight
Housing length:	83 mm
Thread diameter (housing):	M18 x 1
Optical axis:	axial
Sensing range max.:	0.1 m ... 5 m [1)]
Sensing range:	0.1 m ... 4.5 m [2)]
Type of light:	Visible red light
Light source:	LED [3)]
Light spot (distance):	200 mm (4.5 m)
Wave length:	660 nm
Angle of dispersion:	2.5 °

© SICK AG. Subject to change without notice.

[1] [2] PL80A [3] Average service life of 100,000 h at T_A = +25 °C

Mechanics/electronics

Supply voltage:	10 V DC ... 30 V DC [1]
Residual ripple:	≤ 10 % [2]
Power consumption:	≤ 35 mA [3]
Output type:	PNP, Light/dark-switching, Selectable via L/D control wire, open collector
Signal voltage PNP HIGH/LOW:	Approx. VS - 2.0 V/0 V
Output current Imax.:	≤ 100 mA
Response time:	≤ 1 ms [4]
Switching frequency:	500 Hz [5]
Electrical connection:	Connector M12, 4-pin [6]
Cable material:	PPS (Griamid)
Circuit protection::::	A, B, C, D [7] [8] [9] [10]
Protection class:	III
Weight:	120 g
Polarisation filter:	✓
Housing material:	Stainless steel V4A (1.4404, 316L)
Optics material:	Plan, PMMA, surface hardened and temered
Enclosure rating:	IP 67 IP 68 IP 69K [11]
Ambient temperature operation:	-25 °C ... 80 °C
Ambient storage temperature:	-40 °C ... 80 °C
UL File-No.:	FDA, UL No. NRKH.E181493 & cUL No. NRKH7.E181493

[1] Limit values [2] May not exceed or fall short of V_S tolerances [3] Without load, at VS 30 V DC [4] Signal transit time with resistive load [5] With light/dark ratio 1:1 [6] With gold plated contact pins, PPS with FDA certificate [7] A = V_S connections reverse-polarity protected [8] B = interference suppression [9] D = outputs overcurrent and short-circuit protected [10] D = inputs and output reverse-polarity protected [11] With correct mounted IP 69K connector

© SICK AG. Subject to change without notice.

Dimensional drawing

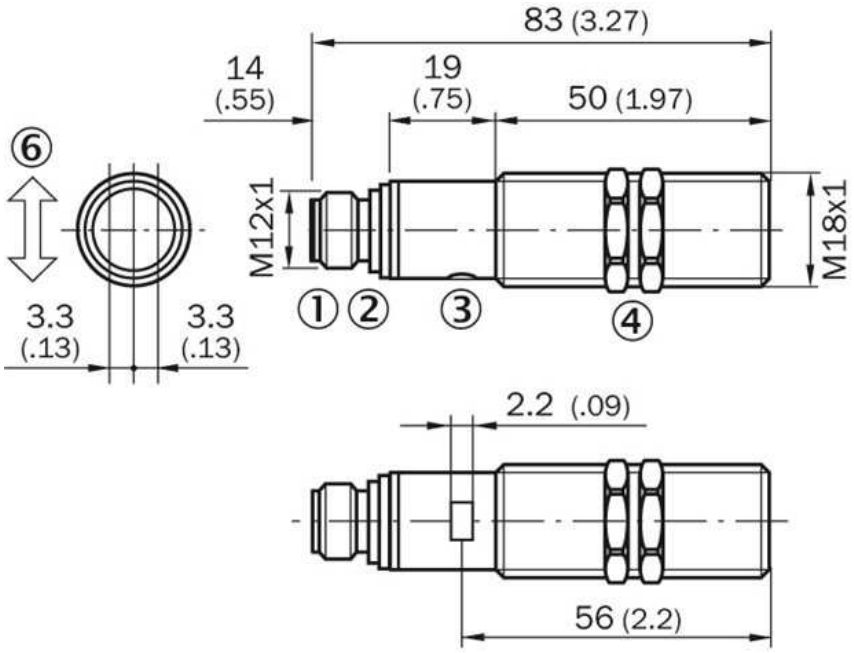

|1| Connector M12, 4-pin
|2| Yellow LED indicator:- lights
continuously:reception signal> reserve factor 2- b
links: Reception signal< reserve factor 2 but > switching
|3| fastening nuts (2 x); width across 24, stainless steel

Connection diagram

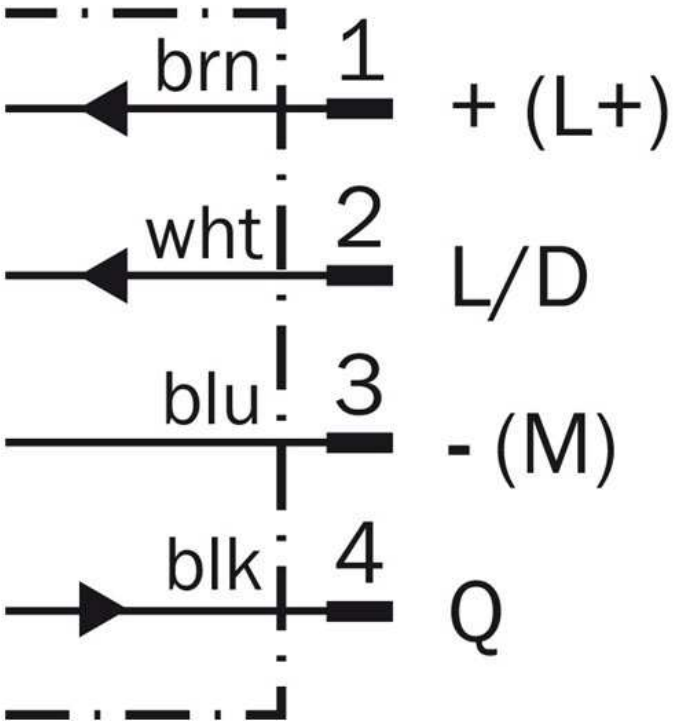

© SICK AG. Subject to change without notice.

Characteristic curve

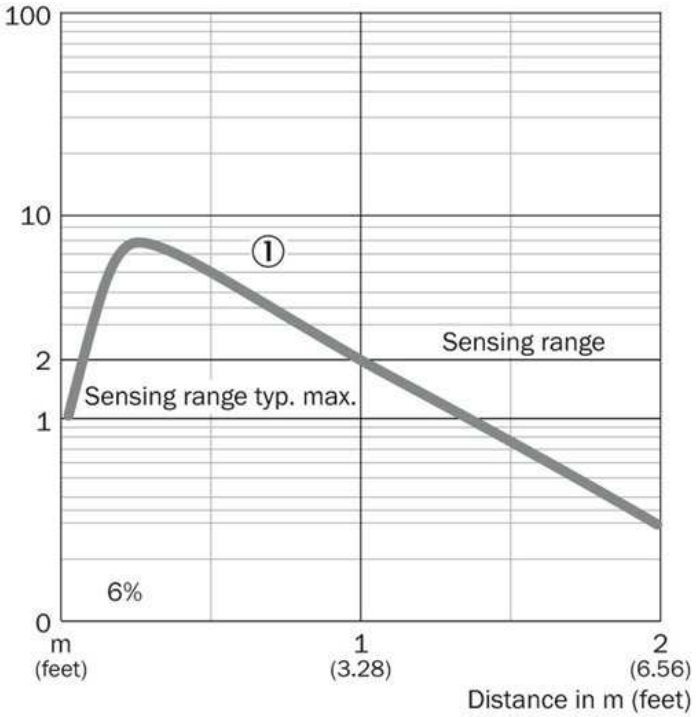

Sensing range diagram

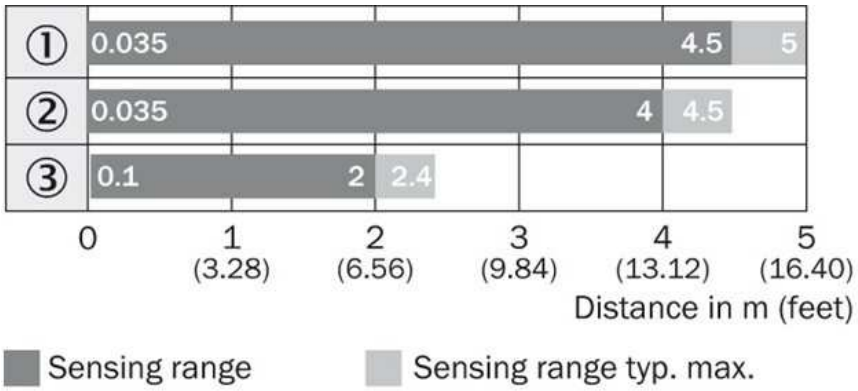

Reflector type

① PL80A

② C110

③ Reflective tape
Diamond Grade

© SICK AG. Subject to change without notice.

Connection type



© SICK AG. Subject to change without notice.

A4 4c int43

Australia
Phone +61 3 9457 0600
1800 33 48 02 – tollfree
E-Mail sales@sick.com.au

Belgium/Luxembourg
Phone +32 (0)2 466 55 66
E-Mail info@sick.be

Brasil
Phone +55 11 3215-4900
E-Mail marketing@sick.com.br

Canada
Phone +1 905 771 14 44
E-Mail information@sick.com

Česká republika
Phone +420 2 57 91 18 50
E-Mail sick@sick.cz

China
Phone +86 4000 121 000
E-Mail info.china@sick.net.cn
Phone +852-2153 6300
E-Mail ghk@sick.com.hk

Danmark
Phone +45 45 82 64 00
E-Mail sick@sick.dk

Deutschland
Phone +49 211 5301-301
E-Mail info@sick.de

España
Phone +34 93 480 31 00
E-Mail info@sick.es

France
Phone +33 1 64 62 35 00
E-Mail info@sick.fr

Great Britain
Phone +44 (0)1727 831121
E-Mail info@sick.co.uk

India
Phone +91–22–4033 8333
E-Mail info@sick-india.com

Israel
Phone +972-4-6881000
E-Mail info@sick-sensors.com

Italia
Phone +39 02 27 43 41
E-Mail info@sick.it

Japan
Phone +81 (0)3 5309 2112
E-Mail support@sick.jp

Magyarország
Phone +36 1 371 2680
E-Mail office@sick.hu

Nederland
Phone +31 (0)30 229 25 44
E-Mail info@sick.nl

Norge
Phone +47 67 81 50 00
E-Mail sick@sick.no

Österreich
Phone +43 (0)22 36 62 28 8-0
E-Mail office@sick.at

Polska
Phone +48 22 837 40 50
E-Mail info@sick.pl

România
Phone +40 356 171 120
E-Mail office@sick.ro

Russia
Phone +7-495-775-05-30
E-Mail info@sick.ru

Schweiz
Phone +41 41 619 29 39
E-Mail contact@sick.ch

Singapore
Phone +65 6744 3732
E-Mail sales.gsg@sick.com

Slovenija
Phone +386 (0)1-47 69 990
E-Mail office@sick.si

South Africa
Phone +27 11 472 3733
E-Mail info@sickautomation.co.za

South Korea
Phone +82 2 786 6321/4
E-Mail info@sickkorea.net

Suomi
Phone +358-9-25 15 800
E-Mail sick@sick.fi

Sverige
Phone +46 10 110 10 00
E-Mail info@sick.se

Taiwan
Phone +886 2 2375-6288
E-Mail sales@sick.com.tw

Türkiye
Phone +90 (216) 528 50 00
E-Mail info@sick.com.tr

United Arab Emirates
Phone +971 (0) 4 88 65 878
E-Mail info@sick.ae

USA/México
Phone +1(952) 941-6780
1 (800) 325-7425 – tollfree
E-Mail info@sickusa.com

More representatives and agencies
at **www.sick.com**

SICK
Sensor Intelligence.