

ONLINE DATA SHEET
www.mysick.com

Photoelectric sensors
V180-2, Photoelectric proximity sensor, Background blanking

VTE180-2N41147



SICK
Sensor Intelligence.

SICK
Sensor Intelligence.

Photoelectric sensors
V180-2, Photoelectric proximity sensor, Background blanking

Model Name > VTE180-2N41147
Part No. > 6037481





Illustration may differ

At a glance

- Lowest-cost M18 housing sensor on the market
- Long sensing distances: 100 mm, 400 mm, 800 mm (max. 1,100 mm)
- Bright power and signal LEDs with 360° visibility
- Wide product portfolio solves a broad range of applications
- High switching frequencies up to 1000 Hz
- Available in a metal housing for applications in harsh environments
- Optical axis selectively axial or radial (90°)

Your benefits

- Lowest-cost M18 cylindrical sensor on the market reduces installation costs
- Bright red sender LED simplifies alignment and saves installation time
- Bright power and signal LEDs with 360° visibility offer quick and simple troubleshooting, reducing installation and maintenance costs
- The flat and smooth lens reduces the collection of dust and dirt, ensuring safe operation with less maintenance and fewer costs

Features

Sensor/detection principle:	Photoelectric proximity sensor, Background blanking
Housing design (light emission):	Cylindrical, straight
Housing length:	62.5 mm
Thread diameter (housing):	M18 x 1
Optical axis:	axial
Sensing range max.:	1 mm ... 500 mm [1]
Sensing range:	1 mm ... 350 mm [2]
Type of light:	Visible red light
Light source:	LED [3]
Wave length:	645 nm
Angle of dispersion:	Ca. 1.5 °
Adjustment:	Potentiometer, 270 °
Light spot size (distance):	Ø 20 mm (400 mm)

[1] [2] Object with 90 % reflectance (referred to standard white, DIN 5033) [3] Average service life of 100,000 h at T_A = +25 °C

Mechanics/electronics

Supply voltage:	10 V DC ... 30 V DC [1]
Residual ripple:	± 10 % [2]

© SICK AG. Subject to change without notice.

Power consumption:	≤ 30 mA [3]
Output type:	NPN, open collector [4]
Switching mode:	Light/dark switching [5]
Switching mode selector:	Selectable via L/D control wire
Output current Imax.:	≤ 100 mA
Response time:	≤ 0.5 ms [6]
Switching frequency:	1,000 Hz [7]
Electrical connection:	Cable, 4-wire, 2 m [8]
Cable material:	PVC
Conductor cross-section:	0.18 mm²
Cable diameter:	Ø 3.8 mm
Circuit protection:::	A, B, D [9] [10] [11]
Protection class:	III
Weight:	62 g
Housing material:	Plastic, PBT/PC
Optics material:	PMMA
Enclosure rating:	IP 67
Items supplied:	Fastening nuts (2 x)
Ambient temperature operation:	-25 °C ... +55 °C
Ambient storage temperature:	-40 °C ... +70 °C
Signal voltage NPN HIGH/LOW:	Approx. VS／< 1.8 V

[1] Limit values, operation in short-circuit protected network max. 8 A [2] May not exceed or fall short of V_S tolerances [3] Without load [4] [5] Control wire open: light-switching L.ON [6] Signal transit time with resistive load [7] With light/dark ratio 1:1 [8] Do not bend below 0 °C [9] A = V_S connections reverse-polarity protected [10] B = inputs and output reverse-polarity protected [11] D = outputs overcurrent and short-circuit protected

© SICK AG. Subject to change without notice.

Dimensional drawing

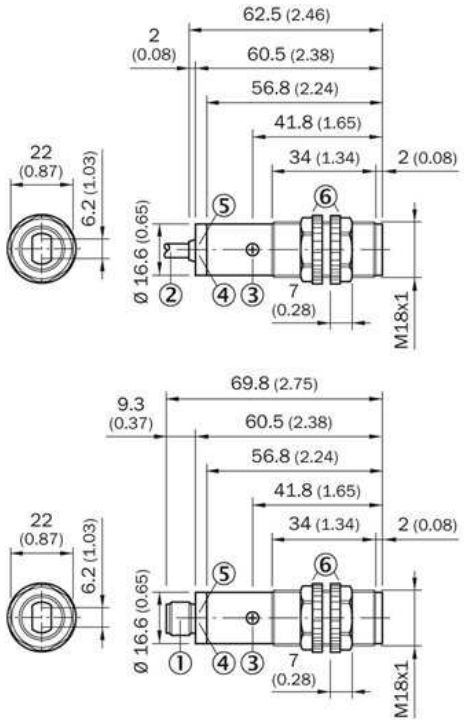

|1| Connector M12, 4-pin
|2| Connection cable 2 m
|3| Sensitivity control (potentiometer, 270°)
|4| LED indicator orange: switching output active
|5| LED indicator green: strentgh indicator
|6| fastening nuts (2 x); width across 22, PC

Adjustments possible

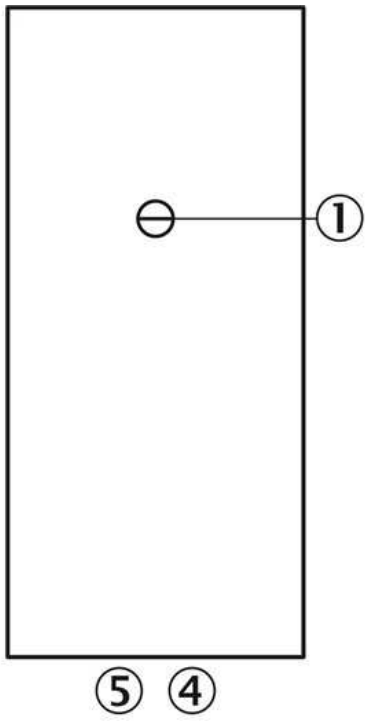

|3| Sensitivity adjustment 270°
|4| LED indicator orange: switching output active
|5| LED indicator green

© SICK AG. Subject to change without notice.

Connection diagram

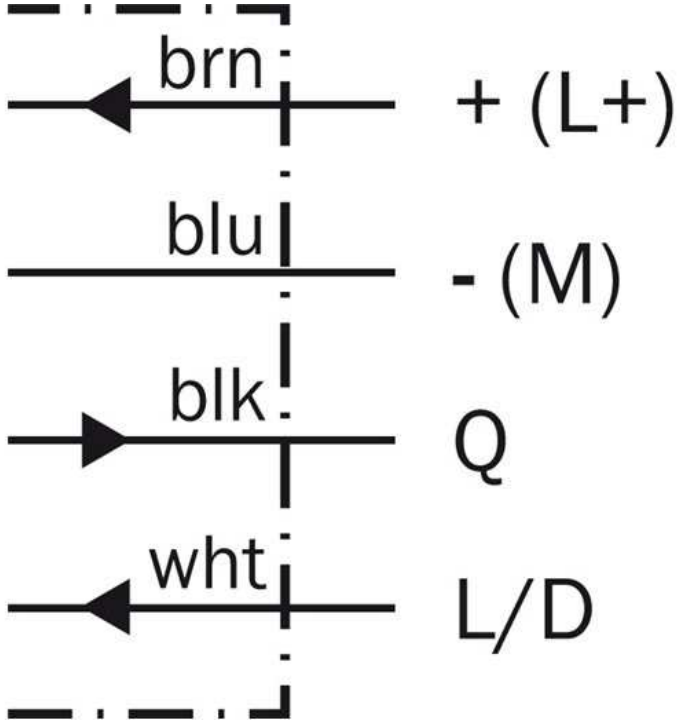

Characteristic curve

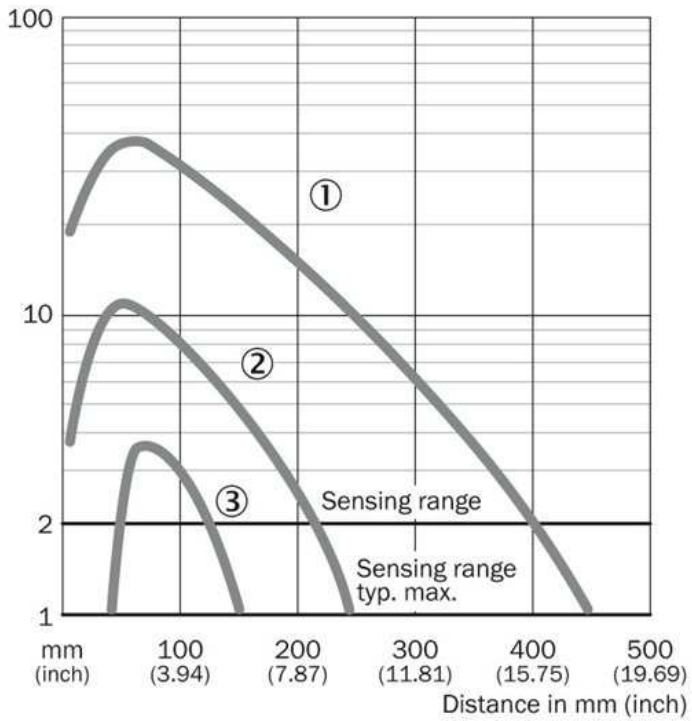

|1| Sensing range on white, 90 % remission
|2| Sensing range on grey, 18 % remission
|3| Sensing range on black, 6 % remission

© SICK AG. Subject to change without notice.

Connection type

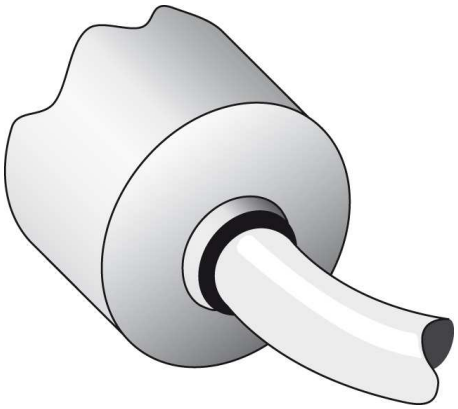

Light spot size

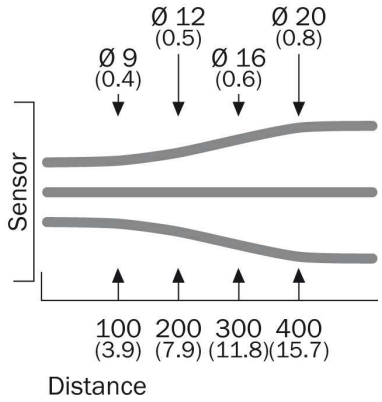

Sensing range diagram

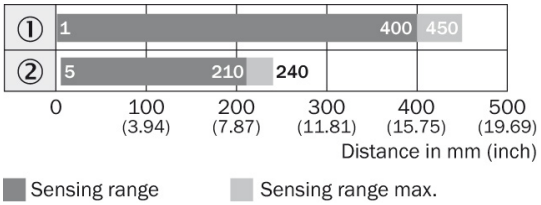

© SICK AG. Subject to change without notice.

A4 4c int43

Australia
Phone +61 3 9457 0600
1800 33 48 02 – tollfree
E-Mail sales@sick.com.au

Belgium/Luxembourg
Phone +32 (0)2 466 55 66
E-Mail info@sick.be

Brasil
Phone +55 11 3215-4900
E-Mail marketing@sick.com.br

Canada
Phone +1 905 771 14 44
E-Mail information@sick.com

Česká republika
Phone +420 2 57 91 18 50
E-Mail sick@sick.cz

China
Phone +86 4000 121 000
E-Mail info.china@sick.net.cn
Phone +852-2153 6300
E-Mail ghk@sick.com.hk

Danmark
Phone +45 45 82 64 00
E-Mail sick@sick.dk

Deutschland
Phone +49 211 5301-301
E-Mail info@sick.de

España
Phone +34 93 480 31 00
E-Mail info@sick.es

France
Phone +33 1 64 62 35 00
E-Mail info@sick.fr

Great Britain
Phone +44 (0)1727 831121
E-Mail info@sick.co.uk

India
Phone +91–22–4033 8333
E-Mail info@sick-india.com

Israel
Phone +972-4-6881000
E-Mail info@sick-sensors.com

Italia
Phone +39 02 27 43 41
E-Mail info@sick.it

Japan
Phone +81 (0)3 5309 2112
E-Mail support@sick.jp

Magyarország
Phone +36 1 371 2680
E-Mail office@sick.hu

Nederland
Phone +31 (0)30 229 25 44
E-Mail info@sick.nl

Norge
Phone +47 67 81 50 00
E-Mail sick@sick.no

Österreich
Phone +43 (0)22 36 62 28 8-0
E-Mail office@sick.at

Polska
Phone +48 22 837 40 50
E-Mail info@sick.pl

România
Phone +40 356 171 120
E-Mail office@sick.ro

Russia
Phone +7-495-775-05-30
E-Mail info@sick.ru

Schweiz
Phone +41 41 619 29 39
E-Mail contact@sick.ch

Singapore
Phone +65 6744 3732
E-Mail sales.gsg@sick.com

Slovenija
Phone +386 (0)1-47 69 990
E-Mail office@sick.si

South Africa
Phone +27 11 472 3733
E-Mail info@sickautomation.co.za

South Korea
Phone +82 2 786 6321/4
E-Mail info@sickkorea.net

Suomi
Phone +358-9-25 15 800
E-Mail sick@sick.fi

Sverige
Phone +46 10 110 10 00
E-Mail info@sick.se

Taiwan
Phone +886 2 2375-6288
E-Mail sales@sick.com.tw

Türkiye
Phone +90 (216) 528 50 00
E-Mail info@sick.com.tr

United Arab Emirates
Phone +971 (0) 4 88 65 878
E-Mail info@sick.ae

USA/México
Phone +1(952) 941-6780
1 (800) 325-7425 – tollfree
E-Mail info@sickusa.com

More representatives and agencies
at **www.sick.com**

SICK
Sensor Intelligence.