

ONLINE DATA SHEET
www.mysick.com

Inductive proximity sensors
Cylindrical threaded housing, IM12

IM12-04BPS-ZC1



SICK
Sensor Intelligence.

SICK
Sensor Intelligence.

Inductive proximity sensors
Cylindrical threaded housing, IM12

Model Name > IM12-04BPS-ZC1
Part No. > 7900037



At a glance

- Size M12
- IP 67 enclosure rating
- Operating temperature from -25° C to +75° C

Your benefits

- Reduced machine downtime
- Reduced mechanical damage
- Fewer maintenance costs due to longer service life
- High resistance to shock and vibrations

Features

Design:	Cylindrical
Thread size:	M12 x 1
Sensing range Sn:	4 mm
Installation type:	Flush
Switching frequency:	1,000 Hz
Output type:	PNP
Output function:	NO
Electrical wiring:	DC 3-wire
Enclosure rating:	IP 67 [1]
Electrical connection:	Connector M12, 4-pin
Housing:	Standard

[1] According to EN 60529

Mechanics/electronics

Supply voltage:	10 V DC ... 30 V DC
Residual ripple:	≤ 10 % [1]
Voltage drop:	≤ 1.2 V [2]
Power consumption:	≤ 10 mA [3]
Time delay before availability:	≤ 100 ms
Hysteresis:	1 % ... 15 %
Repeatability::	≤ 5 % [4] [5]
Temperature drift (of Sr):	± 10 %
EMC:	According to EN 60947-5-2
Output current Ia:	≤ 200 mA

© SICK AG. Subject to change without notice.

Wire-break protection:	0
Short-circuit protection:	✓
Reverse polarity protection:	✓
Power-up pulse protection:	✓
Shock and vibration resistance:	30 g, 11 ms／10 ... 55 Hz, 1 mm
Ambient temperature operation:	-25 °C ... 70 °C
Housing material:	Metal, Nickel-plated brass
Housing cap material:	Plastic
Housing length:	65 mm
Thread length:	43 mm
Tightening torque, max.:	10 Nm

[1] Of V_S [2] At I_a max [3] Without load [4] Ub and Ta constant [5] Of Sr

Installation note

A:	6 mm
B:	12 mm
C:	12 mm
D:	12 mm
E:	2 mm
F:	32 mm
Remark:	Associated graphic see "Installation"

Installation note

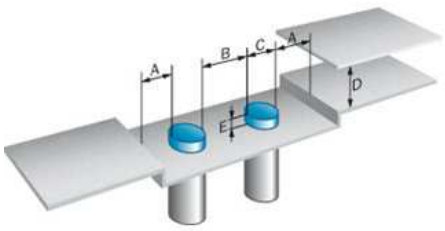

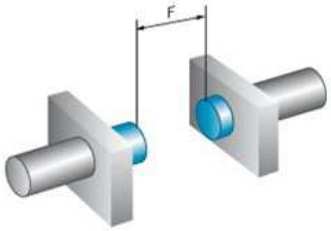

© SICK AG. Subject to change without notice.

Dimensional drawing

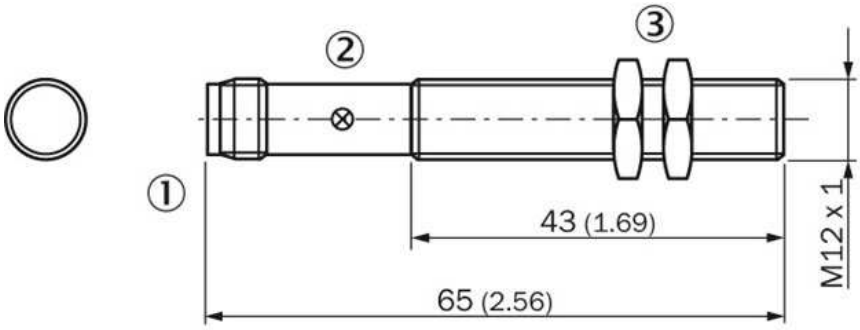

All dimensions in mm (inch)

Connection diagram

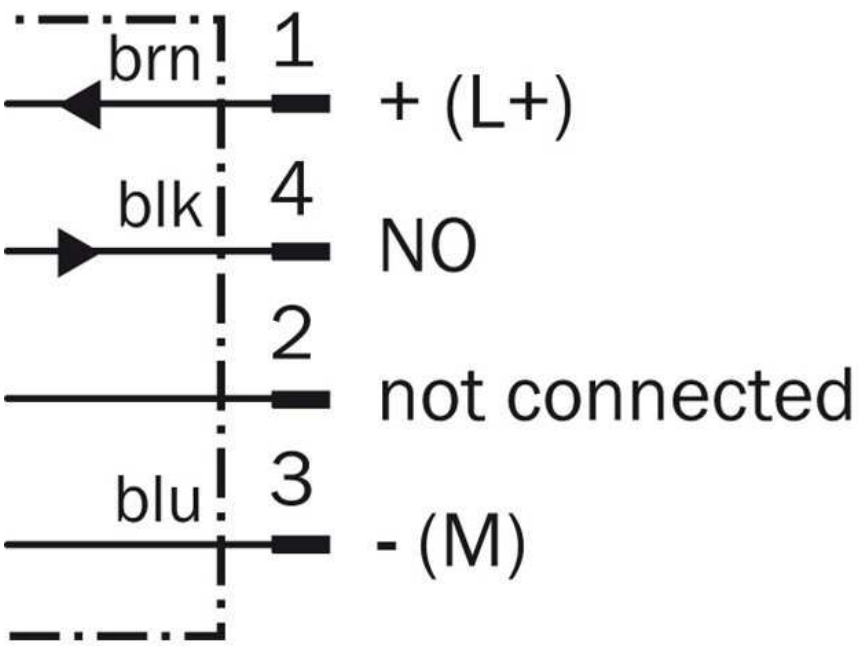

© SICK AG. Subject to change without notice.

Connection type

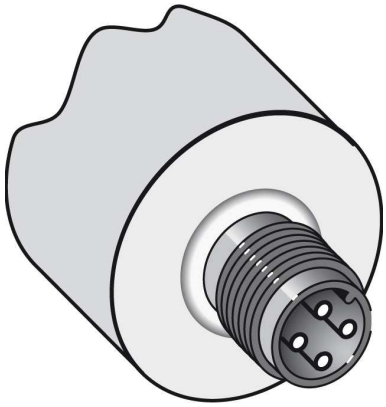

A4 4c int43

Australia
Phone +61 3 9457 0600
1800 33 48 02 – tollfree
E-Mail sales@sick.com.au

Belgium/Luxembourg
Phone +32 (0)2 466 55 66
E-Mail info@sick.be

Brasil
Phone +55 11 3215-4900
E-Mail marketing@sick.com.br

Canada
Phone +1 905 771 14 44
E-Mail information@sick.com

Česká republika
Phone +420 2 57 91 18 50
E-Mail sick@sick.cz

China
Phone +86 4000 121 000
E-Mail info.china@sick.net.cn
Phone +852-2153 6300
E-Mail ghk@sick.com.hk

Danmark
Phone +45 45 82 64 00
E-Mail sick@sick.dk

Deutschland
Phone +49 211 5301-301
E-Mail info@sick.de

España
Phone +34 93 480 31 00
E-Mail info@sick.es

France
Phone +33 1 64 62 35 00
E-Mail info@sick.fr

Great Britain
Phone +44 (0)1727 831121
E-Mail info@sick.co.uk

India
Phone +91–22–4033 8333
E-Mail info@sick-india.com

Israel
Phone +972-4-6881000
E-Mail info@sick-sensors.com

Italia
Phone +39 02 27 43 41
E-Mail info@sick.it

Japan
Phone +81 (0)3 5309 2112
E-Mail support@sick.jp

Magyarország
Phone +36 1 371 2680
E-Mail office@sick.hu

Nederland
Phone +31 (0)30 229 25 44
E-Mail info@sick.nl

Norge
Phone +47 67 81 50 00
E-Mail sick@sick.no

Österreich
Phone +43 (0)22 36 62 28 8-0
E-Mail office@sick.at

Polska
Phone +48 22 837 40 50
E-Mail info@sick.pl

România
Phone +40 356 171 120
E-Mail office@sick.ro

Russia
Phone +7-495-775-05-30
E-Mail info@sick.ru

Schweiz
Phone +41 41 619 29 39
E-Mail contact@sick.ch

Singapore
Phone +65 6744 3732
E-Mail sales.gsg@sick.com

Slovenija
Phone +386 (0)1-47 69 990
E-Mail office@sick.si

South Africa
Phone +27 11 472 3733
E-Mail info@sickautomation.co.za

South Korea
Phone +82 2 786 6321/4
E-Mail info@sickkorea.net

Suomi
Phone +358-9-25 15 800
E-Mail sick@sick.fi

Sverige
Phone +46 10 110 10 00
E-Mail info@sick.se

Taiwan
Phone +886 2 2375-6288
E-Mail sales@sick.com.tw

Türkiye
Phone +90 (216) 528 50 00
E-Mail info@sick.com.tr

United Arab Emirates
Phone +971 (0) 4 88 65 878
E-Mail info@sick.ae

USA/México
Phone +1(952) 941-6780
1 (800) 325-7425 – tollfree
E-Mail info@sickusa.com

More representatives and agencies
at **www.sick.com**

SICK
Sensor Intelligence.