SIEMENS

Data sheet 3RH2140-1BB40



contactor relay, 4 NO, 24 V DC, screw terminal, frame size S00

product brand name	SIRIUS
product designation	Auxiliary contactor
product type designation	3RH2
General technical data	
size of contactor	S00
product extension auxiliary switch	Yes
power loss [W] for rated value of the current without load current share typical	4 W
insulation voltage with degree of pollution 3 at AC rated value	690 V
degree of pollution	3
surge voltage resistance rated value	6 kV
shock resistance at rectangular impulse	
● at DC	10g / 5 ms, 5g / 10 ms
shock resistance with sine pulse	
● at DC	15g / 5 ms, 8g / 10 ms
mechanical service life (operating cycles)	
● of contactor typical	30 000 000
● of the contactor with added electronically optimized auxiliary switch block typical	5 000 000
● of the contactor with added auxiliary switch block typical	10 000 000
reference code according to IEC 81346-2	K
Substance Prohibitance (Date)	10/01/2009
Weight	0.29 kg
Ambient conditions	
installation altitude at height above sea level maximum	2 000 m
ambient temperature	
● during operation	-25 ... +60 °C
● during storage	-55 ... +80 °C
relative humidity minimum	10 %
relative humidity at 55 °C according to IEC 60068-2-30 maximum	95 %
Environmental footprint	
Environmental Product Declaration(EPD)	Yes
global warming potential [CO2 eq] total	133 kg
global warming potential [CO2 eq] during manufacturing	1.3 kg
global warming potential [CO2 eq] during operation	132 kg
global warming potential [CO2 eq] after end of life	-0.227 kg
Main circuit	
no-load switching frequency	
● at AC	10 000 1/h
● at DC	10 000 1/h

Subject to change without notice
© Copyright Siemens

Control circuit/ Control	
type of voltage of the control supply voltage	DC
control supply voltage at DC rated value	24 V
operating range factor control supply voltage rated value of magnet coil at DC	
● initial value	0.8
● full-scale value	1.1
closing power of magnet coil at DC	4 W
holding power of magnet coil at DC	4 W
closing delay	
● at DC	30 ... 100 ms
opening delay	
● at DC	7 ... 13 ms
arcing time	10 ... 15 ms
Auxiliary circuit	
number of NC contacts for auxiliary contacts	0
● instantaneous contact	0
number of NO contacts for auxiliary contacts	4
● instantaneous contact	4
identification number and letter for switching elements	40 E
operational current at AC-12 maximum	10 A
operational current at AC-15	
● at 230 V rated value	10 A
● at 400 V rated value	3 A
● at 500 V rated value	2 A
● at 690 V rated value	1 A
operational current at 1 current path at DC-12	
● at 24 V rated value	10 A
● at 110 V rated value	3 A
● at 220 V rated value	1 A
● at 440 V rated value	0.3 A
● at 600 V rated value	0.15 A
operational current with 2 current paths in series at DC-12	
● at 24 V rated value	10 A
● at 60 V rated value	10 A
● at 110 V rated value	4 A
● at 220 V rated value	2 A
● at 440 V rated value	1.3 A
● at 600 V rated value	0.65 A
operational current with 3 current paths in series at DC-12	
● at 24 V rated value	10 A
● at 60 V rated value	10 A
● at 110 V rated value	10 A
● at 220 V rated value	3.6 A
● at 440 V rated value	2.5 A
● at 600 V rated value	1.8 A
operating frequency at DC-12 maximum	1 000 1/h
operational current at 1 current path at DC-13	
● at 24 V rated value	10 A
● at 110 V rated value	1 A
● at 220 V rated value	0.3 A
● at 440 V rated value	0.14 A
● at 600 V rated value	0.1 A
operational current with 2 current paths in series at DC-13	
● at 24 V rated value	10 A
● at 60 V rated value	3.5 A
● at 110 V rated value	1.3 A
● at 220 V rated value	0.9 A
● at 440 V rated value	0.2 A
● at 600 V rated value	0.1 A
operational current with 3 current paths in series at DC-13	

© Copyright Siemens

● at 24 V rated value	10 A
● at 60 V rated value	4.7 A
● at 110 V rated value	3 A
● at 220 V rated value	1.2 A
● at 440 V rated value	0.5 A
● at 600 V rated value	0.26 A
operating frequency at DC-13 maximum	1 000 1/h
contact reliability of auxiliary contacts	1 faulty switching per 100 million (17 V, 1 mA)
UL/CSA ratings	
contact rating of auxiliary contacts according to UL	A600 / Q600
Short-circuit protection	
design of the miniature circuit breaker for short-circuit protection of the auxiliary circuit up to 230 V	C characteristic: 10 A; 0.4 kA
Installation/ mounting/ dimensions	
mounting position	+/-180° rotation possible on vertical mounting surface; can be tilted forward and backward by +/- 22.5° on vertical mounting surface
fastening method	screw and snap-on mounting onto 35 mm DIN rail
height	57.5 mm
width	45 mm
depth	73 mm
required spacing	
● with side-by-side mounting	
— forwards	10 mm
— upwards	10 mm
— downwards	10 mm
— at the side	0 mm
● for grounded parts	
— forwards	10 mm
— upwards	10 mm
— at the side	6 mm
— downwards	10 mm
● for live parts	
— forwards	10 mm
— upwards	10 mm
— downwards	10 mm
— at the side	6 mm
Connections/ Terminals	
type of electrical connection for auxiliary and control circuit	screw-type terminals
type of connectable conductor cross-sections	
● for auxiliary contacts	
— solid or stranded	2x (0.5 ... 1.5 mm²), 2x (0.75 ... 2.5 mm²), 2x 4 mm²
— finely stranded with core end processing	2x (0.5 ... 1.5 mm²), 2x (0.75 ... 2.5 mm²)
● for AWG cables for auxiliary contacts	2x (20 ... 16), 2x (18 ... 14), 2x 12
Safety related data	
product function	
● positively driven operation according to IEC 60947-5-1	Yes
● suitable for safety function	Yes
suitability for use safety-related switching OFF	Yes
service life maximum	20 a
proportion of dangerous failures	
● with low demand rate according to SN 31920	40 %
● with high demand rate according to SN 31920	73 %
B10 value with high demand rate according to SN 31920	1 000 000; With 0.3 x Ie
failure rate [FIT] with low demand rate according to SN 31920	100 FIT
ISO 13849	
device type according to ISO 13849-1	3
overdimensioning according to ISO 13849-2 necessary	Yes
IEC 61508	
safety device type according to IEC 61508-2	Type A
Electrical Safety	

Subject to change without notice
© Copyright Siemens

protection class IP on the front according to IEC 60529	IP20
touch protection on the front according to IEC 60529	finger-safe, for vertical contact from the front

Approvals Certificates

General Product Approval

KC

EMV	Functional Saftey	Test Certificates			Maritime application
RCM	Type Examination Certificate	Type Test Certificates/Test Report	Special Test Certificate	Miscellaneous	ABS

Maritime application

BUREAU VERITAS, DNV, LRS, PRS, RINA, RMRS

other			Railway	Dangerous goods	Environment
Miscellaneous	产品合格 QC PASS	Confirmation	Special Test Certificate	Transport Information	EPD

Environment

Environmental Confirmations

Further information

Information on the packaging
https://support.industry.siemens.com/cs/ww/en/view/109813875
Information- and Downloadcenter (Catalogs, Brochures,…)
https://www.siemens.com/ic10
Industry Mall (Online ordering system)
https://mall.industry.siemens.com/mall/en/en/Catalog/product?mlfb=3RH2140-1BB40
Cax online generator
http://support.automation.siemens.com/WW/CAXorder/default.aspx?lang=en&mlfb=3RH2140-1BB40
Service&Support (Manuals, Certificates, Characteristics, FAQs,...)
https://support.industry.siemens.com/cs/ww/en/ps/3RH2140-1BB40
Image database (product images, 2D dimension drawings, 3D models, device circuit diagrams, EPLAN macros, ...)
http://www.automation.siemens.com/bilddb/cax_de.aspx?mlfb=3RH2140-1BB40&lang=en
Characteristic: Tripping characteristics, I²t, Let-through current
https://support.industry.siemens.com/cs/ww/en/ps/3RH2140-1BB40/char
Further characteristics (e.g. electrical endurance, switching frequency)
http://www.automation.siemens.com/bilddb/index.aspx?view=Search&mlfb=3RH2140-1BB40&objecttype=14&gridview=view1

© Copyright Siemens

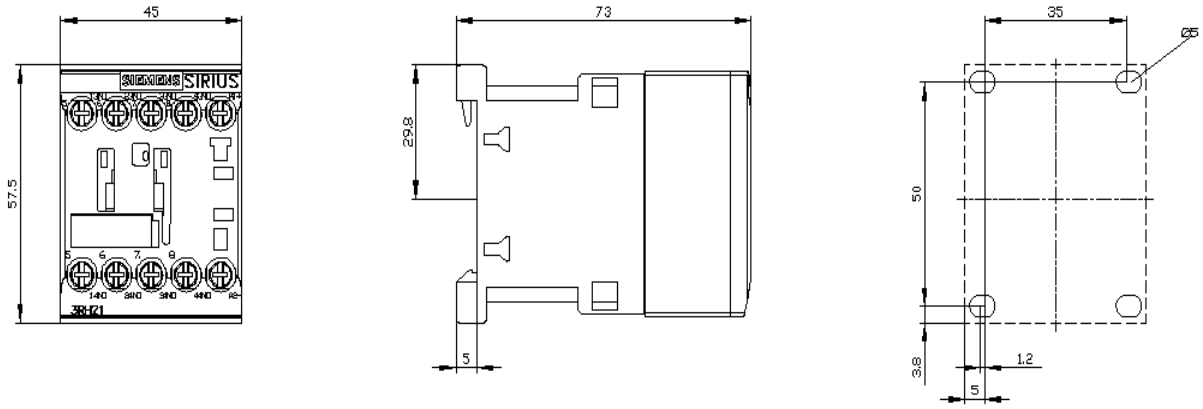

Subject to change without notice
© Copyright Siemens

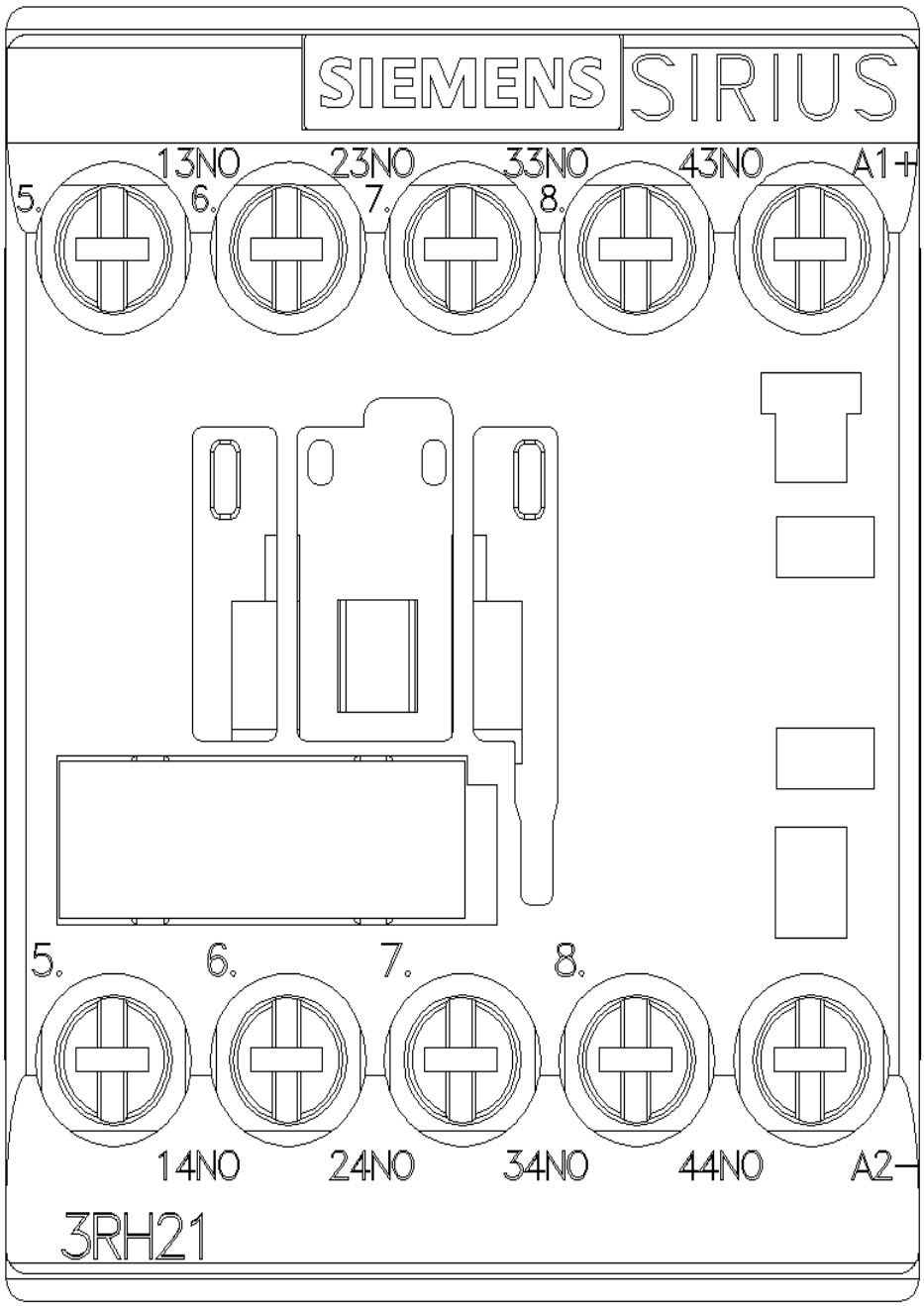

Subject to change without notice
© Copyright Siemens

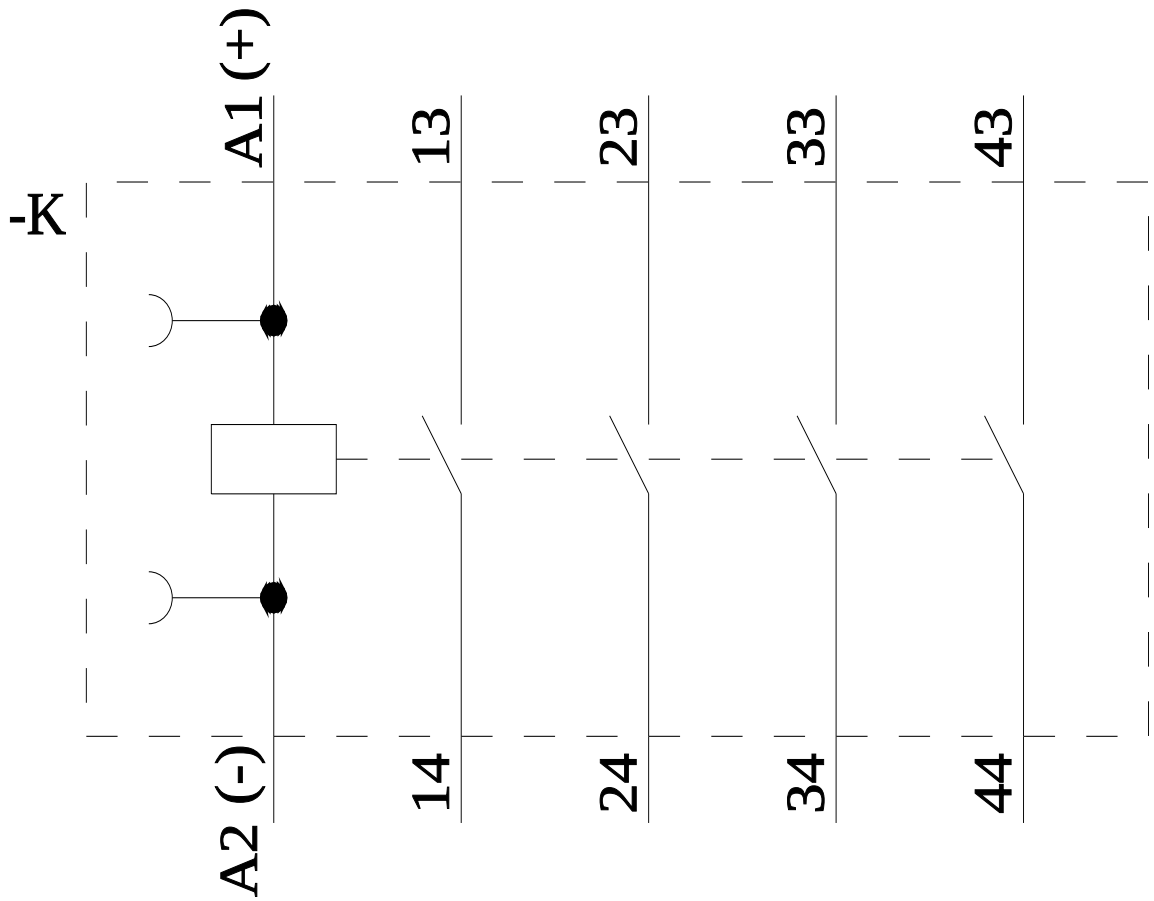

last modified: 7/4/2025

Subject to change without notice
© Copyright Siemens