MOTOR SUPPRESSOR

RC, 3x400VAC/5,5kW

3 × 400 V AC
RC

Suppressors for other voltages, frequencies, and motor ratings available on request. Do not use RC motor suppressors with frequency inverters.

Link to Product

Illustration



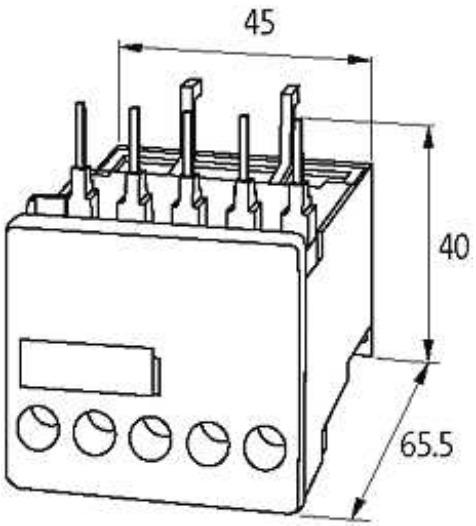

The information in this brochure has been compiled with the utmost care.
Liability for the correctness completeness and topicality of the information is restricted to gross negligence. Version: 05/16

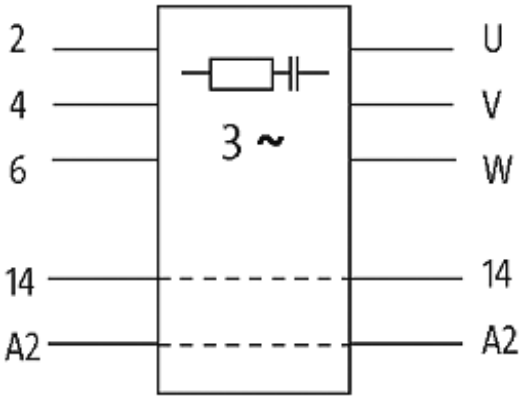

Product may differ from Image

Approvals

Appropriate contactors

	Siemens 3 RT 10, 3 RT 20 screw terminal

General data

Connection	fits directly into SIRIUS contactors, size 00
Temperature range	-20...+60 °C
Dimensions H × W × D	40×45×65.5 mm

Commercial data

country of origin	CZ
customs tariff number	85363010
minimum order quantity	1

The information in this brochure has been compiled with the utmost care.
Liability for the correctness completeness and topicality of the information is restricted to gross negligence. Version: 05/16