MURR ELEKTRONIK
stay connected

MOTOR SUPPRESSOR

RC, 3x400VAC/5,5kW

3 × 400 V AC
RC

Suppressors for other voltages, frequencies, and motor ratings available on request. Do not use RC motor suppressors with frequency inverters.

Link to Product

Illustration



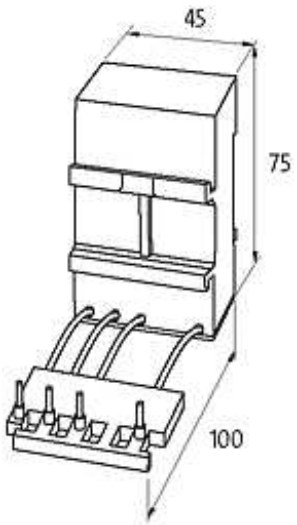

The information in this brochure has been compiled with the utmost care.
Liability for the correctness completeness and topicality of the information is restricted to gross negligence. Version: 05/16

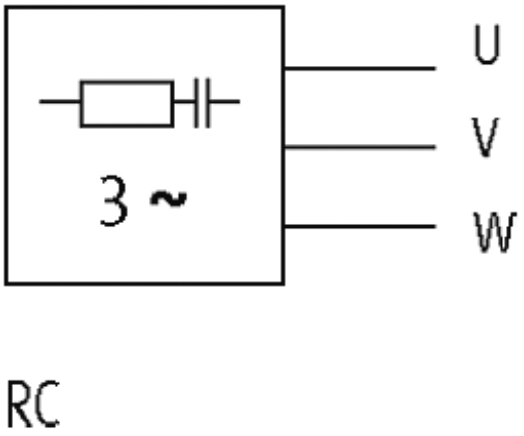

Product may differ from Image

Appropriate contactors	
	SIEMENS contactors
	Moeller contactors
	Sprecher+Schuh contactors
General data	
Connection	Ferrule ends, load side securely fixed
Temperature range	-20...+60 °C
Dimensions H × W × D	75×45×100 mm
Technical Data	
Frequency	50...60 Hz
Commercial data	
country of origin	CZ
customs tariff number	85363010
minimum order quantity	1

The information in this brochure has been compiled with the utmost care.
Liability for the correctness completeness and topicality of the information is restricted to gross negligence. Version: 05/16