Front adapters - FLKM 50-PA-S300/SO167 - 2307662

Please be informed that the data shown in this PDF Document is generated from our Online Catalog. Please find the complete data in the user's documentation. Our General Terms of Use for Downloads are valid (http://phoenixcontact.com/download)



Front adapter for SIMATIC S7-300

RoHS

Key Commercial Data

Packing unit	1 pc
GTIN	4 017918 992729
GTIN	4017918992729
Weight per Piece (excluding packing)	63.200 g
Custom tariff number	85369010
Country of origin	Germany

Technical data

Note

Type of note	Notes on operation
Note	The products may only be installed or used by qualified personnel. Compliance with all safety requirements, including all applicable laws, regulations, and standards, must be ensured.

Ambient conditions

Ambient temperature (operation)	-20 °C ... 50 °C
Ambient temperature (storage/transport)	-20 °C ... 70 °C

General

Max. permissible operating voltage	< 25 V AC
	< 60 V DC

Front adapters - FLKM 50-PA-S300/SO167 - 2307662

Technical data

General

Max. permissible current	1 A (per path)
Max. permissible total current	2 A
Mounting position	any

Connection data 1

Connection name	Controller level
Channels which can be connected	24

Connection data 2

Connection name	Field level
Connection method	IDC/FLK pin strip
Number of connections	1
Number of positions	50
Pitch	2.54 mm

Supported controller

Controller	SIEMENS S7-300 / ET 200 M
- suitable I/O card	6ES7 326-1BK02-0AB0
	6ES7 336-1HE00-0AB0

Standards and Regulations

Designation	Air clearances and creepage distances
Standards/regulations	DIN EN 50178: 1998-04
Rated insulation voltage	63 V
Rated surge voltage	0.6 kV (1.2/50 µs)
Insulation	Functional insulation
Pollution degree	2
Overvoltage category	II

Environmental Product Compliance

China RoHS	Environmentally Friendly Use Period = 50 years
	For details about hazardous substances go to tab “Downloads”, Category “Manufacturer's declaration”

Drawings

Front adapters - FLKM 50-PA-S300/SO167 - 2307662

Circuit diagram

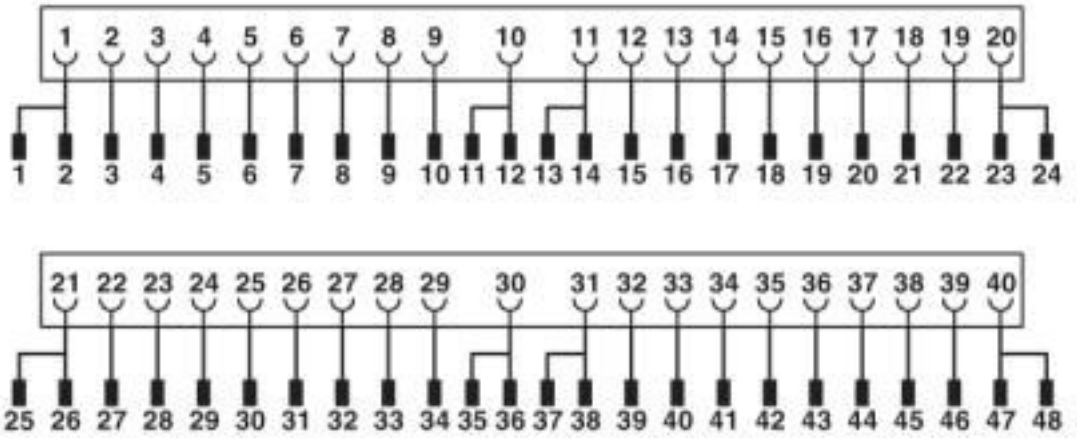

Connection scheme FLKM 50-PA-S300/SO167

Classifications

eCl@ss

eCl@ss 4.0	27250300
eCl@ss 4.1	27250300
eCl@ss 5.0	27250300
eCl@ss 5.1	27250300
eCl@ss 6.0	27249200
eCl@ss 7.0	27249290
eCl@ss 8.0	27249290
eCl@ss 9.0	27242292

ETIM

ETIM 4.0	EC002584
ETIM 5.0	EC002584
ETIM 6.0	EC002584
ETIM 7.0	EC002584

UNSPSC

UNSPSC 6.01	30211824
UNSPSC 7.0901	39121421
UNSPSC 11	39121421
UNSPSC 12.01	39121421
UNSPSC 13.2	32151601
UNSPSC 19.0	32151601

Front adapters - FLKM 50-PA-S300/SO167 - 2307662

Approvals

Approvals

Approvals

EAC

Ex Approvals

Approval details

EAC	EAC	RU C-DE.A*30.B.01742

Phoenix Contact 2020 © - all rights reserved
http://www.phoenixcontact.com