SIEMENS

3124



Synco™ 700

Switching and monitoring device RMS705B

- **Various switching and monitoring functions combined with mathematical and physical operations (calculations, minimum, maximum and average calculations, enthalpy, signal doubler/inverter).**
- **Lead/lag control of pumps, fans, motors, refrigeration machines, etc. with runtime balancing.**
- **3 universal controllers with limiting function.**
- **Data acquisition: Pulse count (for display purposes), operating hours count, trend display of data as well as event logging (e.g. for legionella function).**
- **Freely configurable, thanks to extended configuration options.**
- **For additional, universal inputs for displaying and monitoring/alarming.**
- **Modular extendable with extension modules RMZ785, RMZ787, and RMZ788.**
- **Menu-driven operation with separate operator unit: Plug-in type or detached mounting.**
- **KNX bus connection for operation and process information.**

Application

- To control and monitor plant elements from heating, ventilation and refrigeration technology
- Free configuration of application

The device offers extended configuration opportunities for free configuration as part of the available function blocks and includes, for this reason, no predefined standard applications.

As is the case for all Synco™ 700 devices, once an application is created, it can be archived as readable and writable parameter sets and can be reused for additional plants as modified or identical applications.

Functions

Universal inputs

8 universal inputs for

- Passive or active analog input signals of the following measured values (°C, %, g/kg, kJ/kg, W/m^2, bar, mbar, m/s, Pa, and ppm, Universal 000.0, Universal 0000, pulse).
- Digital input signals (potential-free contacts)

Additional I/Os through extension modules

Additional inputs and outputs to extend functionality.
Total **max. 4 extension modules per RMS705B** can be connected.
Select from:

- 1x universal module RMZ785 (8 UI)
- 2x universal modules RMZ787 (4 UI, 4 DO)
- 2x universal modules RMZ788 (4 UI, 2 AO, 2 DO)

Maximum extension results:

- Maximum 28 universal inputs
  (LG-Ni1000, 2x LG-Ni1000, Pt1000, T1, DC 0...10 V, 0…1000 Ω (setpoint), digital, pulse (mechanical, electronic)).
- Maximum 18 control output relays.
- Maximum 8 modulating outputs DC 0...10 V.

Data acquisition

Pulse meter (for display only, not for billing purposes).
4 meters available to acquire consumption data.
Pulses from gas, hot water, cold water and electricity meters are processed.

- Pulse metering
  (Wh, kWh, MWh, kJ, MJ, GJ, ml, l, m3, heating costs units, BTU, no unit).

Hours run counter
4 operating hour meters are available with the current display of

- Operating hours
- Maintenance message (with adjustable time interval)
- Operating hours since the last maintenance

Trend data display
Up to 4 independent trend channels available to log measured values for a set period.
Room temperature and outside air temperatures can be logged by the KNX bus in addition to logical device inputs.

Event logging (e.g. for legionella function)
Four event loggers are available. Use the event logger to log events and monitor their mandatory occurrence.

- Logging of the last 10 events per logger with time and date stamp upon reaching value "Limit value on" and "Limit value off".
- Save max. or min. value during event.
- Selectable fault message for breaching or exceeding the minimum and maximum
  - Event cycle time.
  - Event length.

Control and monitor functions

Universal motor blocks
Six universal motor blocks are available to control and monitor motors.
Applicable per motor block

- 1-speed motor (pump, fan)
- 2-speed motor (fan)
- Twin motor (twin motor, twin pump)
- Precommand for preceding dampers and valves
- Various adjustable times
- Motor kick and ON for low outside air temperature
- Operating hours per motor block

Rotary step switch
2 rotary step switches are available with selectable step switch characteristic per block as

- Linear step switch
- Binary step switch
- Flexible step switch
- With staged precommand, switching and modulating outputs
- Lead/lag control of pumps, fans, motors, refrigeration machines, etc. with runtime balancing
- Various adjustable times

Logic function blocks
10 freely configurable logic function blocks are available to process multiple logically linked universal input variables.

- Configurable logic functions: AND, NAND, OR, NOR, EXOR and EXNOR
- Adjustable switch-on and switch-off delay and minimum switch-on and switch-off time.
- Operating switch (AUTO, ON, OFF), configurable for manual control.

7-day time switches
Six 7-day time switches with the following functions are available:

- 6 switch on and off time daily, configurable relay output.
- Yearly timeswitch with automatic summer-/wintertime changeover.
- Operating switch (AUTO, ON, OFF), configurable for manual control.
- Configurable vacation and special day program.
- Can receive other weekly scheduler programs via KNX bus as slave (transmission not possible).

Comparators

- 2 comparators are available to compare two analog input signals.
- Output signal with adjustable switch on and off delay as well as adjustable minimum switch on and off period.

Calculators
- Calculators can convert input values by self-generated formula or using optional standard formulas (A-B) x C in output values (DC 0…10 V).
- 4 base operations are available as well as exponential and root functions ($n^{0.5}$).

Min-max-average
- 2 function blocks with 5 inputs each for minimum and maximum selection and average calculation (output signals: DC 0…10 V).
- The split function is subdivided into 5 inputs in two ranges (2 inputs and 3 inputs).

Enthalpy calculation

The following variable can be calculated from temperature and the relative humidity (both via inputs; output signals: DC 0…10 V):
- Enthalpy
- Absolute humidity
- Enthalpy difference
- Dew point temperature
- Wet bulb temperature

Signal inverter/signal doubler
- Splitting an input signal to two DC 0…10 V outputs and inverting output signals.
- Signal doubling for sequential control of pumps, valves and fans.

Heating/cooling demand

Collect, evaluate and forward heat and cooling demand from and via the KNX bus.
Can also be configured:
- Modulating (DC 0…10 V) output (e.g. for demand-dependent setpoint adjustment for a refrigeration machine).
- Relay output (e.g. to switch-on/switch-off a refrigeration machine).
- Demand-dependent setpoint shift acting on a primary controller.
- Adjustable setpoint increase for use with primary controller.

HC changeover
- If a 2-pipe system (heating/cooling) is used, you can switch heating/cooling via a digital or analog input, via an operating mode switch (auto, heating, cooling), by date or via the KNX bus.
- The heating/cooling signal can be sent to the KNX bus or issued via a relay.

Fault messages

Fault indication with red LED, acknowledgement with button.
The following options are available:
- 20 universal inputs as fault signal inputs;
  fault messages from KNX bus are also configurable.
- 2 relay outputs as fault message relay.
- 1 digital input; for external reset of fault messages.

Control functions

Universal controller

3 universal controllers as PID sequence controllers with 2 sequence outputs each (1 heating sequence, 1 cooling sequence) per sequence controller.

- Control to an absolute variable or a differential variable.
- General limitation function (minimal/maximal) with PI mode per universal controller either as an absolute limitation or as relative temperature limitation.
- Individually adjustable heating and cooling setpoints (or high and low setpoints) for Comfort and Eco.
- Universal adjustment: The setpoint can be adjusted based on another variable or adapted to a remote setpoint transmitter.
- Setpoint changeover between operating modes Comfort and Eco using a digital input.
- Adjustable control timeout.

Bus functions

Universal bus applications

- Remote operation of Konnex functions via a Konnex network with RMZ792 bus operating unit.
- Remote operation/monitoring of plant and devices (in the Konnex network) via Internet with Web server OZW77x…
- Indication of fault status messages delivered by other devices on the bus.
- Delivery of a common fault status message from all devices on the bus to a fault relay.
- Time synchronization.
- Passing on and adoption of outside temperature signal.
- Sending or receiving the yearly timeswitch schedule (holidays/special days) from some other controller.
- Receipt of weekly schedule from another controller.
- Sending or receiving the annual program for the holidays/special days from another controller.
- Receive and send a demand signal (hot water, chilled water) to the primary controller or the hot water/chilled water source.
- Receiving and evaluating refrigeration demand signals if configured as a primary controller or hot water/chilled water source.

Universal transmission and reception zones

Device RMS705B allows for universal data exchange via own terminals as well as via terminals of extension modules RMZ78x.
Data between devices is exchanged via KNX bus.

Universal inputs, digital and analog outputs of RMS705B can be used as transmission objects (for transmission zones).
Universal inputs of RMS705B can be used as reception objects (in reception zones).

- Transmission zones:
  Universal inputs (N.X1…A8(2).X4)
  Digital outputs (N.Q1…A8(2).Q5)
  Analog outputs (N.Y1…A8(2).Y2).
- Reception zones:
  Universal inputs (N.X1…A8(2).X4).

Examples for not allowed applications

The following applications or input/output values may **not** be implemented using universal transmission and reception zones:

- Safety-relevant plants and equipment (e.g. fire alarm off, smoke extraction, frost protection function).
- If request "Simultaneous start condition of plants" exists.
- Applications where communications failure of transmission *or* reception zones may cause damage.
- Time-critical control paths *or* control paths with greater degree of difficulty (e.g. speed control via pressure, humidity).
- Main controlled variables that must be available.
- Acquisition and evaluation of pulses.

Note

After RMS705B power-up, it may take some time until the bus signals are available. This may result in faulty plant behavior in the case of transmission and reception zone applications that are not allowed.

Service and operating functions

- Display of setpoint and actual values
- Outside temperature simulation
- Input terminal simulation
- Wiring test
- Data backup

Type summary

Switching and monitoring device

Type	*Universal inputs*	*Positioning outputs*	*Swiching outputs*	*Default languages*
RMS705B-1	8	4	6	**de**, fr, it, es, pt
RMS705B-2	8	4	6	**de**, fr, nl, en
RMS705B-3	8	4	6	da, fi, no, sv
RMS705B-4	8	4	6	pl, cs, sk, hu, ru, bg
RMS705B-5	8	4	6	ro, sl, sr, hr, el, tr
RMS705B-6	8	4	6	zh

Accessories

	Name	*Type*	*Data sheet*
Operator / service units	Plug-in type operator unit	**RMZ790**	N3111
	Detached operator unit	**RMZ791**	N3112
	Service tool	**OCI700.1**	N5655
Extension modules	Universal module with 8 universal inputs	**RMZ785**	N3146
	Universal module with 4 universal inputs and 4 relay outputs	**RMZ787**	N3146
	Universal module with 4 universal inputs, 2 relay outputs and 2 analog outputs (DC 0…10 V).	**RMZ788**	N3146
	Module connector for detached extension modules	**RMZ780**	N3138

Ordering

Type	*Stock number*	*Name*
		Switching and monitoring device…
RMS705B-1	S55370-C100	… (de, fr, it, es, pt)
RMS705B-2	S55370-C101	… (de, fr, nl, en)
RMS705B-3	S55370-C102	… (da, fi, no, sv)
RMS705B-4	S55370-C103	… (pl, cs, sk, hu, ru, bg)
RMS705B-5	S55370-C104	… (ro, sl, sr, hr, el, tr)
RMS705B-6	S55370-C105	… (zh)

When ordering, please specify the quantity, product name and type code fort he control and monitoring device, e. g: Switching and monitoring device **RMS705B-1**.

Equipment combinations

The following table lists equipment that can be combined with the RMS705B and extension modules:

Device	*Type*	*Data sheet*
Passive sensors	All sensors with sensing element LG-Ni1000, Pt1000, T1 (PTC)	N1721...N1846 N1713
Active sensors	All sensors with - AC 24 V supply voltage - modulating output DC 0...10 V	N1821, N1850...N1932
Monitoring devices	QAF81..., QAF64..., QFA1000, QFA1001, QFM81…, QXA2000, QBM81...	N1284, N1283, N1518, N1514, N1542, N1552
Passive signal sources	BSG21.1	N1991
Active signal sources	BSG61	N1992
Room units	QAA25, QAA27	N1721
Actuating equipment	All motorized, hydraulic and magnetic actuators with - operating voltage AC 24 V - for modulating control DC 0...10 V.	N4000...N4999
Variable speed drive	SED2…	N5192
Transformers	SEM62.1, SEM62.2	N5536

Product documentation

Documentation type	*Document no.*
Product range description: Synco™ 700	**CE1S3110en**
Basic documentation, detailed description of all functions	**CE1P3124en**
Installation instructions (G3151): RMB795, RMS705B, RMU7..B	**74 319 0731 0**
Data sheet for "Konnex bus KNX"	**CE1N3127en**
Basic documentation "Communication via Konnex bus for devices of the series Synco™ 700 and RXB room controller"	**CE1P3127en**
CE declaration of conformity: HVAC controls Synco 700 range	**CE1T3110xx**
Environmental product declaration	**CE1E3110en01**

Technical design

The device allows free configuration of application using the operating units RMZ790 or RMZ791.
For operating actions of the functions, refer to the Basic Documentation CE1P3124en.

Mechanical design

The unit consists of a device insert and terminal base. The terminal base has two terminal levels as well as connection elements (electrical and mechanical) for one extension module. The device insert with ist printed circuit boards is attached to the terminal base.
The device can be mounted on a top hat rail (EN 60 715-TH35-7.5), or directly on a wall.
The controller is operated either with the plug-in type or detached operator unit (refer to "Accessories").

Operating, display and connecting elements

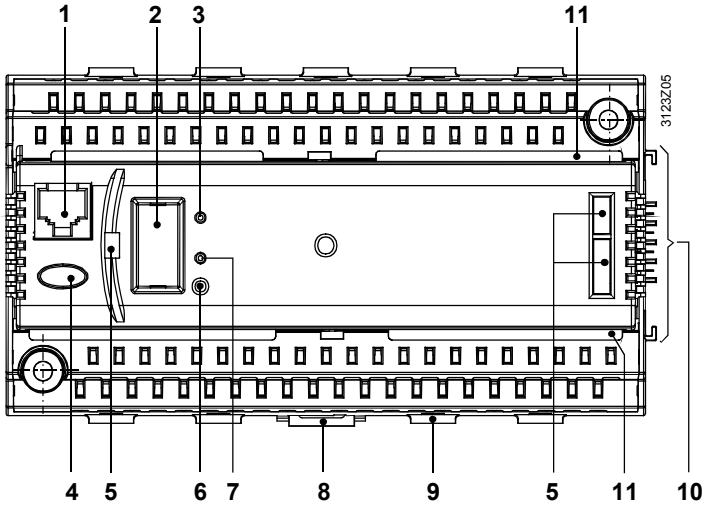

Key

1	Connection facility for the service tool (RJ45 connector)
2	Removable cover with connection facility for the operator unit
3	LED "RUN" device operating status display; with the following meanings: *LED lit:* Supply voltage, no fault in application and periphery *LED off:* No supply voltage or application fault / periphery
4	Button "🔔" with LED (red) displays a fault status message and its acknowledgement; meanings as follows: *LED blinking:* Fault status message, ready to acknowledge *LED lit:* Fault status message pending, but not yet reset *LED off:* No fault status message *Press button:* Acknowledge fault or reset
5	Openings for plug-in type operator unit RMZ790
6	Programming button "Prog": Learning button to changeover between the normal mode and the addressing mode to assume the physical device address (requires tool to operate)
7	Programming LED "Prog" to display normal mode (LED off) or addressing mode (LED on) to assume physical device address
8	Catch for fitting the controller to a top hat rail
9	Fixing facility for a cable tie (cable strain relief)
10	Electrical and mechanical connection elements for extension module
11	Rest for the terminal cover

Notes

Engineering

- AC 24 V voltage required to power the device. It must meet requirements for SELV/PELV (safety extra low-voltage).
- The transformers used must be safety isolating transformers featuring double insulation to EN 60 742 or EN 61 558-2-6; they must be suited for 100 % duty
- Fuses, switches, wiring and earthing must be in compliance with local regulations
- Sensor wires should not be run parallel to mains carrying wires that power fans, actuators, pumps, etc.
- A maximum of 4 extension modules can be connected to the RMS705B (for combinations, see section "Functions").

Mounting and installation

- The device and extension modules are designed for:
  - Mounting in a standard cabinet as per DIN 43 880.
  - Wall mounting on an existing tophat rail (EN 50 022-35x7.5).
  - Wall mounting using two fixing screws.
  - Flush panel mounting.
- Not permitted in wet or damp spaces. The permissible environmental conditions must be observed.
- If the controller is not operated inside a control panel, use the detached operator unit RMZ791 in place of the plug-in type operator unit RMZ790.
- Disconnect the system from the power supply prior to mounting and installation the device.
- **The device insert may not be removed from the terminal base!**
- If extension modules are used, they must be attached to the right side of the device in the correct order in accordance with the internal configuration.
- The extension modules require no wiring between themselves or to the device. The electrical connections are made automatically when attaching the modules. If it is not possible to arrange the extension modules side by side, the first of the detached modules must be connected to the last previous module or to the device using the RMZ780 module connector. In that case, the cumulated cable length may not exceed 10 m.

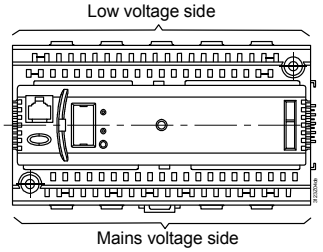

- All connection terminals for protective extra low-voltage (sensors, data bus) are located in the upper half of the unit, those for mains voltage (actuators and pumps) at the bottom
- Each terminal (spring cage terminal) can only accommodate one solid wire or one stranded wire. Cables must be stripped to 7 to 8 mm to connect. To introduce the cables into the spring cage terminals and to remove them, a screw driver size 0 or 1 required. Cable strain relief can be provided with the help of the fixing facility for cable ties.
- The device mounted on a top hat rail together with modules can only be removed from the rail after the module directly attached to the device has been removed
- Installation instructions are packed with the device.

Commissioning

- Using the operator unit RMZ790 or RMZ791, or the service tool, staff trained by **Siemens** and having the required access rights can change the configuration and the parameters of the application programmed in the device online or offline at any time using the service tool.
- During the commissioning process, the application is deactivated and the outputs are in a defined off state. This means that no process and alarm signals will then be delivered to the bus
- On completion of the configuration, the device automatically makes a new start
- When leaving the commissioning pages, the peripheral devices connected to the universal inputs (including the extension modules) are automatically tested and identified. If a peripheral device is missing, a fault status message will be delivered
- The operator unit can be removed and plugged in or connected while operating.
- If adaptations to specific plants are required, they must be recorded and the documentation kept inside the control panel.
- For the procedure to be followed when starting up the plant for the first time, refer to the installation instructions.

Maintenance

The switching and monitoring device RMS705B is maintenance free (no batteries, no fuses). Use only a dry towel to clean the housing.

Repair

The switching and monitoring device RMS705B cannot be repaired on site.

Disposal

The switching and monitoring device RMS705B is subject to directive 2002/96/EEC (WEEE, Waste of Electrical and Electronic Equipment).



"The device is considered electronics device for disposal in terms of European Directive 2002/96/EG (WEEE) and may not be disposed of as domestic garbage. The corresponding national, legal regulations must be observed and the device must be disposable via the appropriate channels. Observe all local and applicable laws."

Technical data

Power supply (G, G0)	Rated voltage	AC 24 V ±20 %
	Safety extra low-voltage (SELV) / protective extra low-voltage (PELV) to	HD 384
	Requirements for external safety isolating transformer (100 % ED, maximum 320 VA) to	EN 60 742 / EN 61 558-2-6
	Frequency	50/60 Hz
	Power consumption (excl. modules)	12 VA
	Supply line fusing	Max. 10 A
Functional data	Clock reserve	48 hours typical, min. 12 hours
Universal inputs	Number	refer to "Type summary"
Measured value inputs (X…)	Sensors	
	Passive	LG-Ni1000, T1, Pt1000 2x LG-Ni1000 (averaging) 0…1000 Ω,
	Active	DC 0...10 V
Status inputs (X...)	Contact sensing	
	Voltage	DC 15 V
	Current	5 mA
	Requirements for status contacts	
	Signal coupling	potential-free
	Type of contact	maintained contact
	Insulating strength against mains potential	AC 3750 V to EN 60 730
	Requirements for pulse contacts	Screened cables recommended
	Signal coupling	potential-free
	Type of contact	Pulse contact
	Mechanical transmitter (reed contract)	
	Maximum pulse frequency	25 Hz
	Minimum pulse length	20 ms (with max. 10 ms bounce length)
	Electronic transmitter	
	Maximum pulse frequency	100 Hz
	Minimum pulse length	5 ms
	Insulating strength against mains potential	AC 3750 V to EN 60 730
	Perm. resistance	
	Contacts closed	max. 200 Ω
	Contacts open	min. 50 kΩ
Outputs	Number of positioning and switching outputs	refer to "Type summary"
Positioning outputs Y…	Output voltage	DC 0...10 V
	Output current	±1 mA
	Max. load	continuous short-circuit
⚠ Switching outputs AC 230 V (Q1x...Q7x)	External supply line fusing	
	Non-renewable fuse (slow)	max. 10 A
	Automatic line cutout	max. 13 A
	Release characteristic	B, C, D to EN 60 898
	Relay contacts	
	Switching voltage	Max. AC 250 V min. AC 19 V
	AC current	max. 4 A res., 3 A ind. (cos φ = 0.6)
	At 250 V	min. 5 mA
	At 19 V	min. 20 mA
	Switch-on current	max. 10 A (1 s)
	Contact life at AC 250 V	Guide value
	At 0.1 A res.	2×10^7 cycles
	At 0.5 A res.	4×10^6 cycles (N. O.) 2×10^6 cycles (changeover)
	At 4 A res.	3×10^5 cycles (N.O.) 1×10^5 cycles (changeover)
	Red. factor at ind. (cos φ = 0.6).	0.85
	Insulating strenth	
	between relay contacts and system electronics (reinforced insulation)	AC 3750 V, to EN 60 730-1
	between neighboring relay contacts (operational insulation)	
	Q1⇔Q2; Q3⇔Q4; Q6⇔Q7	AC 1250 V, to EN 60 730-1
	between relay groups (reinforced insulation)	
	(Q1, Q2) ⇔ (Q3, Q4) ⇔ (Q6, Q7)	AC 3750 V, to EN 60 730-1

Power supply ext. devices (G1)	Voltage	AC 24 V
	Power	Max. 4 A
Interfaces	Konnex bus	
	Type of interface	Konnex-TP1
	Bus loading number	2.5
	Bus power supply (decentral., can be switched off)	25 mA
	Power failure of short duration	
	to EN 50 090-2-2	100 ms with 1 extension module
	Extension bus	
	Connector specification	4 contacts SELV/PELV
	Number of plug-in cycles	max. 10.
	Service tool connection facility	RJ45 connector
Perm. cable lengths	For passive measuring and positioning signals	(measuring errors can be corrected on
	Type of signal	the "Settings / Inputs" menu)
	LG-Ni 1000, T1	max. 300 m
	Pt 1000	max. 300 m
	0…1000 Ω	max. 300 m
	Contact sensing (status and impulse contacts).	max. 300 m
	For DC 0...10 V measuring and control signals	refer to Data Sheet of the signal delivering device
	For Konnex bus	max. 700 m
	Type of cable	2-core without screening, twisted pairs
	For switching outputs (Q1x…Q7x)	Max. 300 m
Electrical connection	Connection terminals	Spring cage terminals
	For wires	Ø 0,6 mm ... 2.5 mm2
	For stranded wires without ferrules	0.25 ... 2.5 mm2
	For stranded wires with ferrules	0.25 ... 1.5 mm2
	Konnex bus connection	Non-interchangeable
Degree of protection	Degree of protection of housing to IEC 60 529	IP 20 (when mounted)
	Safety class to EN 60 730	device suited for use with equipment of safety class II
Environmental conditions	Operation to	IEC 60 721-3-3
	Climatic conditions	Class 3K5
	Temperature (housing and electronics)	0 ...50 °C
	Humidity	5...95 % r. h. (non-condensing)
	Mechanical conditions	Class 3M2.
	Transport to	IEC 60 721-3-2
	Climatic conditions	Class 2K3
	Temperature	−25...+70 °C
	Humidity	< 95 % r. h.
	Mechanical conditions	Class 2M2
Classifications to EN 60 730	Mode of operation, automatic controls	Type 1B
	Degree of contamination, controls' environment	2
	Software class	A
	Rated surge voltage	4000 V
	Temperature for ball-pressure test of housing	125 °C
Materials and colors	Terminal base	Polycarbonate, RAL 7035 (light-gray)
	Controller insert	Polycarbonate, RAL 7035 (light-gray)
	Packaging	Corrugated cardboard
Standards	Product safety	
	Automatic electrical controls for household and similar use	
	Applications	EN 60 730-1
	Special requires on energy controllers	EN 60 730-2-11
	Electromagnetic compatibility	
	For use in industrial and residential environment	
	Immunity	EN 60730-1
	Emissions	EN 60730-1
	Home and Building Electronic System (HBES)	EN 50 090-2-2
	CE conformity to	
	EMC directive	2004/108/EC
	Low voltage directive	2006/95/EC

	✓- Conformity	
	Australian EMC Framework	Radio communication act 1992
	Radio Interference Emission Standard	AS/NZS 3548
	Environmental compatibility	ISO 14001 (Environment)
	The product environmental declaration CE1E3110en01 contains data on environmentally compatible product design and assessments (RoHS compliance, materials composition, packaging, environmental benefit, disposal)	ISO 9001 (Quality) SN 36350 (Environmentally compatible products) 2002/95/EC (RoHS)
Dimensions (weight)	Excl. packaging	0.49 kg

Connection diagrams

Connection diagram

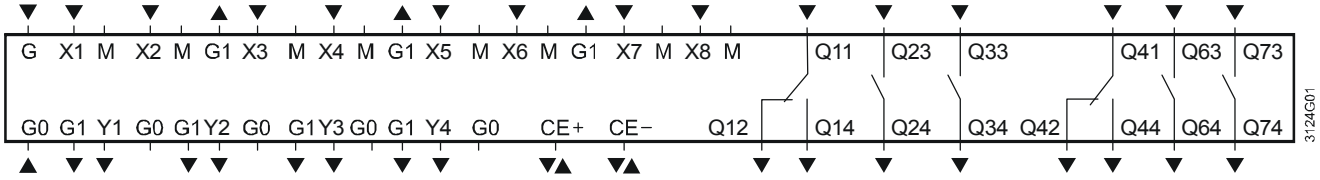

Key

G, G0	Rated voltage AC 24 V
G1	Output voltage AC 24 V to power external, active devices
M	Measuring neutral for signal input
G0	System neutral for signal output
X1...X8	Universal signal inputs for LG-Ni1000, 2x LG-Ni1000 (mean values), T1, Pt1000, 0…1000 Ω, DC 0…10 V, pulse, contact query (potential-free)
Y1...Y4	Control *or* status outputs, analog DC 0...10 V
Q1x/Q4x	Potential-free relay outputs (changeover contact) for AC 24...230 V
Q2x/3x/6x/7x	Potential-free relay outputs (N.O. contact) for AC 24...230 V
CE+	KNX bus data line, positive
CE−	KNX bus data line, negative

Notes

Each terminal (spring cage terminal) can only accommodate one solid wire or one stranded wire. Double terminals are internally interconnected.

Connection diagrams

Connections on the measuring side

Examples:

Connection diagram 1:
Measuring section with passive sensor

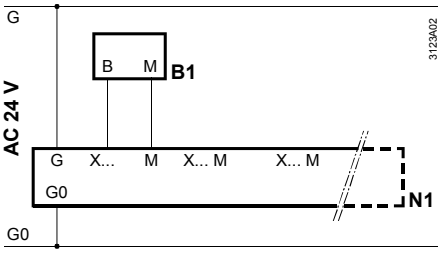

Connection diagram 2:
Measuring section with active sensor and active signal source

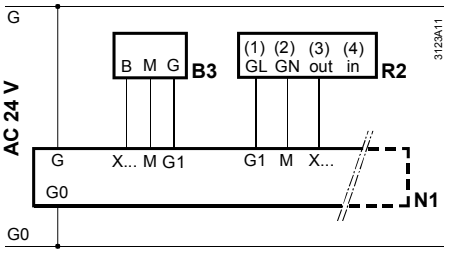

Connection diagram 3:
Measuring section with pulse transmitter

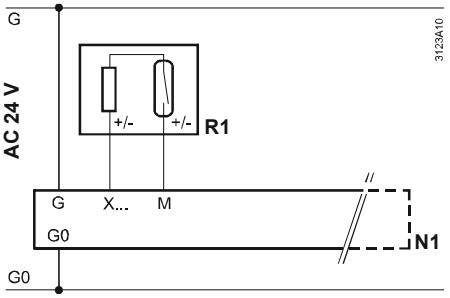

Recommendation:
Use shielded wires

Connections on the switching and monitoring side

Connection diagram 4:
Multiple use of sensor (B1, N2), external operating mode changeover (S6)

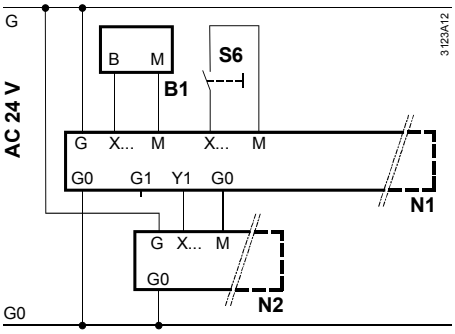

Connection diagram 5:
2-speed motor control (fan)

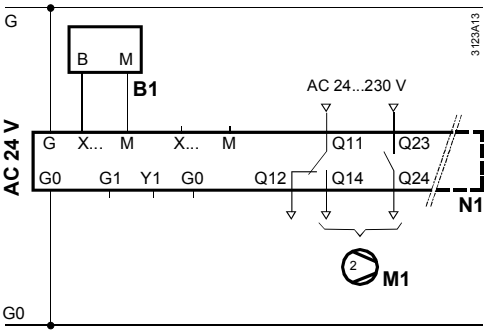

Legend to the connection diagrams 1 through 5

N1	RMS705B	R1	Reed pulse source
N2	Universal controller RLU210	R2	Setpoint adjuster BSG61
B1	Duct temperature sensor QAM21.20…	S6	HC operating mode changeover, manual
B3	Duct temperature sensor QAM2161.040	M1	2-speed fan

Note

See basic documentation CE1P3124en for required, internal configuration of the Switching and Monitoring Device RMS705B.

Dimensions

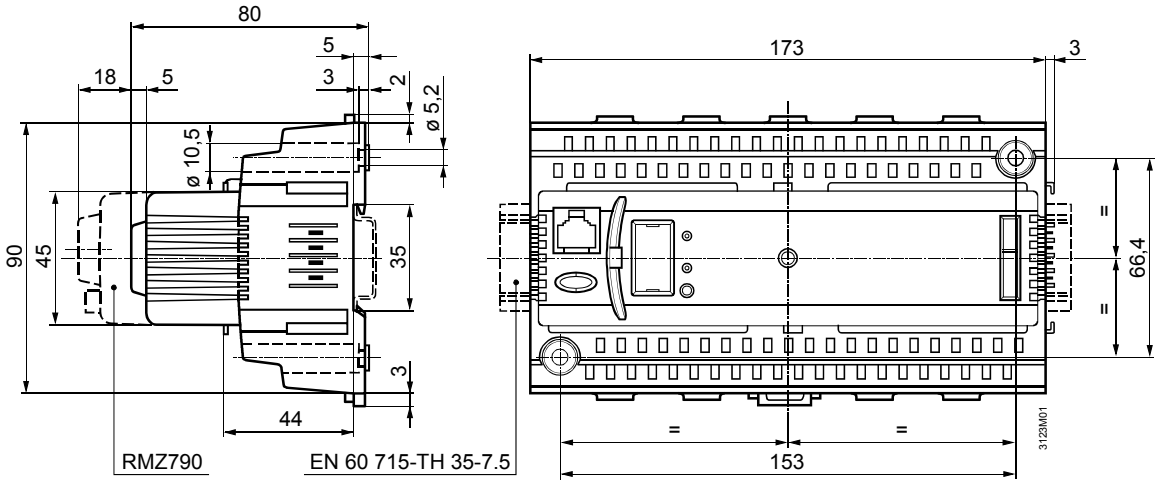

Dimensions in mm

© 2010 Siemens Switzerland Ltd