

Differential pressure sensor

QBM2030-...

for air and non-aggressive gases

- **Pressure-linear characteristic with selectable pressure measuring range**
- **Operating voltage AC 24 V or DC 13.5…33 V**
- **Output signal DC 0...10 V**
- **Zero-point adjustment**
- **Simple and fast mounting thanks to integrated mounting brackets in the housing**
- **Maintenance free**
- **Calibrated and temperature-compensated measuring signal**
- **Supplied with tubing connection set**

Application

The differential pressure sensor acquires differential, over and under pressure of air and nonaggressive gases.

Fields of application

- Measuring the slightest differential pressures in ventilation and air conditioning ducts
- Check air flows
- Monitor filters and control fans

Type summary

Type (ASN)	Product number (SSN)	Pressure measuring ranges			Output signal
		Measuring range 1	Measuring range 2	Measuring range 3	
QBM2030-1U	S55720-S244	±50 Pa	±100 Pa	0…100 Pa	0…10 V DC
QBM2030-5	S55720-S245	0...200 Pa	0...250 Pa	0…500 Pa	0…10 V DC
QBM2030-30	S55720-S246	0...1000 Pa	0...1500 Pa	0…3000 Pa	0…10 V DC

Conversion Pa - bar 100 Pa = 1 hPa = 1 mbar

Ordering and delivery

When ordering a differential pressure sensor, please specify the quantity, type, and product name.

Example

Type (ASN)	Product number (SSN)	Product designation
QBM2030-1U	S55720-S244	Differential pressure sensor.

The differential pressure sensor is supplied with a connection set consisting of 2 m plastic tubes, 2 air duct probes (ABS) and 4 fixing screws. Additional accessories may be ordered separately.

Accessories

Additional sets of air duct probes are available depending on measuring requirements. Various mounting brackets are also available depending on installation location.

Type	Name	Data sheet
AQB2000	Mounting bracket, for mounting sensors in isolated air ducts	N1590
AQB21.2	Top hat rail adapters (5 pieces) for DIN top hat rails, HT 35-7.5	N1590
FK-PZ1	Air duct probe, short, stainless steel, with elastic lead-through for simple, quick, and airtight mounting.	N1589
FK-PZ2	Air duct probe, long, aluminum, with orifice plates for precise measuring requirements	N1589

Mode of operation

The sensor acquires the differential pressure using a silicon rubber membrane and ceramic lever. The sensor generates as per the deflection, a linear and temperature-compensated output signal DC 0...10 V.

Mechanical design

The differential pressure sensor consists of:

- Sensor housing with mounting bracket, cable entry, and removable snap-on cover with safety screw
- Pressure chamber with membrane and ceramic lever
- Printed circuit board with connection terminals and DIP switch for selecting measuring range (see "Commissioning notes")
- Zero-point adjustment button (see "Commissioning notes")

Setting, and connection elements

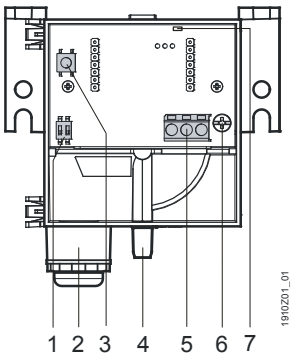

1 2 DIP switch for selecting the measuring range
2 Cable gland entry Pg 11 (without cable strain relief)
3 Push-button for zero-point adjustment
4 Connection nipples (see "Mounting notes")
5 Connection terminals
6 Safety screw for hinged cover
7 LED to display zero-point adjustment

Engineering notes

The transformer used must be suited for safety extra low voltage (SELV). It must have separate windings and be designed for 100 % duty. Transformer size and fuse must comply with local safety regulations.
Observe maximum permissible cable lengths. If cable lengths exceed 50 meters and run parallel to the mains cables: Use shielded cables!

Mounting notes

The differential pressure sensor is suited for direct mounting on air ducts, walls, ceilings, or in control panels.
The supplied 2 meter PVC tubing can be modified to the duct connection on the plant.
To achieve the housing protective class indicated under "Technical data", the differential pressure sensors must be mounted with the nipples facing down. In addition, they should be higher than the air duct probes.

⚠ Caution

If the pressure connection nipples point upward or are at a lower level than the air duct probes, condensation can collect inside the sensor, causing damage to the device.

Note

The pressure tubing for the sensor nipples are connected as follows to the differential pressure sensors:

On the air duct side	On the pressure sensor side
Tubing with higher pressure side (lower vacuum)	Connect to pressure nipple "P1" or "+"
Tubing with lower pressure side (higher vacuum)	Connect to pressure nipple "P2" or "–"

The sensor is supplied with mounting instructions.
For detailed information on installation and mounting position, refer to the Sensor Installation Guide in BT download center.

Commissioning notes

⚠ Caution

The values indicated under "Technical data" apply only to vertically mounted differential pressure sensors (connection nipples pointing down).

Sensor calibration

Value deviations are possible for horizontal mounting (housing cover on top or bottom). These deviations can be compensated for by using the zero-point adjustment.

Zero-point adjustment

See also Setting, and connection elements

1. Wiring connection terminals – Do not connect pressuring tubing at this time.
2. Press the zero-point adjustment button for more than 2 seconds until the LED briefly lights up
3. Connect pressure tubing

Set measuring range

A DIP switch is used to individual adjust the pressure measuring range.
The various DIP switch positions are described on the inside of the hinged cover.

Adjustable pressure ranges

DIP setting	QBM2030-1U	QBM2030-5	QBM2030-30
*	0…100 Pa	0…500 Pa	0…3000 Pa
	+/- 100 Pa	0…250 Pa	0…1500 Pa
	+/- 50 Pa	0…200 Pa	0…1000 Pa

* Factory setting

Technical data

Electrical interface	Power supply	Safety extra low voltage (SELV/PELV)
	Operating voltage	AC 24 V ±15 %, 50/60 Hz or DC 13.5...33 V
	Power consumption	<0.5 VA
	Current draw	<10 mA
	Output voltage	DC 0...10 V
	Burden (R_{Load})	>10 kΩ
	Output	Not galvanically separated, 3-wire connection, short-circuit proof, protected against reverse polarity
Functional data	Measuring range	refer to "Type summary"
	Sensing element	Piezo-resistive (silicone membrane, ceramic bar)
	Measuring accuracy at recommended mounting position and 20 °C ambient temperature	(FS = Full Scale)
	Total error	<±3 % FS
	TC zero point	<±0.1 % FS/°C
	TC sensitivity	<±0.06 % FS/°C
	Reaction time	1 s
	Tolerable overload on one side	
	on P1	5,000 Pa (10,000 Pa for types QBM2030-5, -30)
	on P2	400 Pa
	Rupture pressure	
	0…70 °C	1.5 × overload
	at room temperature	2 × overload
	Media	Air and non-aggressive gases
	Admissible medium temperature	0...70 °C
	Maintenance	Maintenance free
Connections	Electrical connection	
	Screw terminals for	max. 1.5 mm^2 (wire or stranded wire)
	Cable lead	Cable gland entry Pg 11 (without cable strain relief)
	Pressure connection	PVC nipples ∅ 6.2 mm
Degree of protection	Degree of protection of housing at recommended installation	IP 42 as per IEC 60 529
	Protection class	III as per EN 60 730
Environmental conditions	Permissible ambient temperature	
	Operation	0...70 °C
	Transport/storage	-25…+70 °C
	Permissible ambient humidity	<90 % r.h. (without condensation)
Directives, standards	CE conformity as per	
	EMC guidelines	2004/108/EC
	Immunity, emissions	EN 61 326-1, EN 61 326-2-3
	RoHs directive	2011/65/EU
	Technical RoHS documentation	EN 50581
	Conformity emissions	AS /NZS 61 000-6-3
Environmental compatibility	The product environmental declaration CE1E1910en contains data on environmentally compatible product design and assessments (RoHS compliance, materials composition, packaging, environmental benefit, disposal)	ISO 14001 (Environment) ISO 9001 (Quality)
Dimensions (weight)	Weight (with packaging)	0.183 kg

Connection terminals

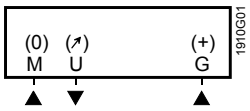

G (+) Operating voltage AC 24 V or DC 13.5…33 V
M (0) GND, measuring neutral
U (↗) Measuring signal DC 0...10 V

Dimensions

Air duct probes

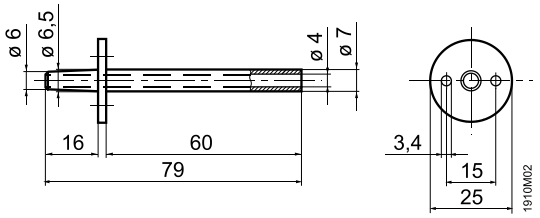

QBM2030

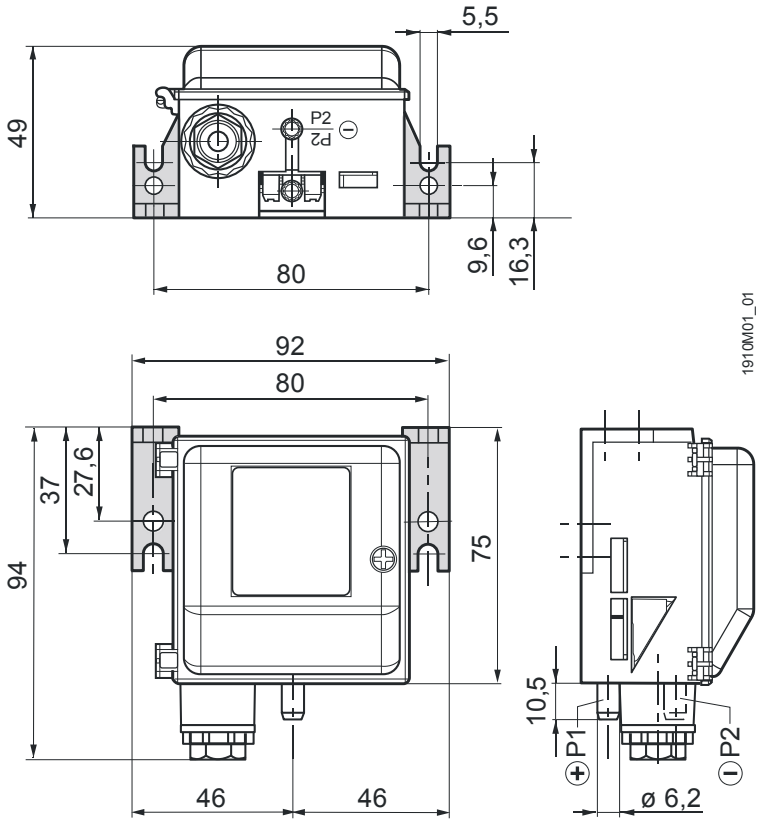

Dimensions in mm

© 2000-2013 Siemens Switzerland Ltd